Swift Group Owner's Handbook

Carrera Van Conversion

Issued September 2026

Dear owner

Thank you for deciding to buy one of our new motorhomes.

We are sure you will enjoy many happy hours in it and we hope the information and hints in this handbook will heighten your enjoyment.

The handbook has been designed to give you a general guide to the care, use and maintenance of your motorhome. Whether you are a new or an experienced motorhomer the hints will help to protect your investment.

The information contained will answer most of your queries, but if there are any aspects which are not covered please consult your appointed dealer. We would suggest you make a note of your dealers name and contact information below.

Important - please quote the base VIN (vehicle identification number) in all correspondence with your dealer or Swift Group Limited (Swift), this can be found on the lower corner of the front windscreen or on the Fiat plate positioned on the front cross member within the engine compartment.

All the illustrations and descriptive matter in this handbook are intended to give a general idea of the motorhome. Changing market and supply situations may prevent us from maintaining the exact specification details in this handbook. We therefore reserve the right to alter specifications as materials and conditions demand.

Dealers are not agents of Swift Group Limited and have absolutely no authority to bind Swift Group Limited by any express or implied undertaking or representation.

Online Handbooks

Throughout the season, specifications and equipment details contained within this handbook may change. Please refer to our online handbooks (www.swiftgroup.co.uk) for the most up-to-date version of your handbook.

Handbook Definitions

Customers should note that this handbook contains general information for the use and care of your product and the Technical Handbook, which contains technical information, weights and dimensions of your product.

Happy touring!

Dealer Name:

.....

Telephone Number:

.....

E-mail:

.....

VIN:

.....

Sales Tel:

.....

Service Centre Tel:

.....

Parts Tel:

.....

First Service Due:

.....

Contents

1. Warranty 5

2. Motorhome code 13

3. Preparing for the road 19

4. En-route 29

5. Safety and security 33

6. Arrival at site 37

7. Connecting services 39

8. Preparing for the road 53

9. Fitted equipment 79

10. Motorhome Care 103

11. Technical information 121

12. Useful information 133

1. Warranty

1.1 Panel Van Conversion Motorhome Warranty 6

1.2 Warranty Terms, Cover, Limitations and Exclusions 6

1.3 Swift Warranty Cover, Limitations and Exclusions 7

1.4 Warranty Conditions - Annual Service and Inspection Records 10

1.5 Change of Ownership 11

1.6 My Swift Life 11

1.7 Contacting Swift 11

1.8 Supplier contacts 12

1.1 Panel Van Conversion Motorhome Warranty

All the illustrations and descriptive matter in the handbook are intended to give a general idea of the vehicle. Changing market and supply situations and our policy of continuous product development may prevent us from maintaining the exact specifications detailed in the handbook. We therefore reserve the right to alter specifications as materials and conditions demand.

Dealers are not agents of Swift Group Limited ("Swift") and have absolutely no authority to bind the manufacturer by any express or implied undertaking or representation.

1.2 Warranty Terms, Cover, Limitations and Exclusions

New Warranty Registration As the first owner, your dealer should register your new leisure vehicle within 10 days of you taking ownership to activate your warranty. We also recommend that you register for My Swift Life at www.myswiftlife.co.uk. Registration confirms that you accept the warranty and annual service arrangements and that these have been fully explained to you by your dealer. This does not affect your statutory rights under the Consumer Rights Act.

Second or subsequent owners may be entitled to the remainder of the existing warranty, subject to the warranty transfer requirements set out in section "1.5 Change of Ownership".

Your leisure vehicle has two warranties:

Swift Warranty Terms: Habitation and Bodyshell

For all parts and fittings of your panel van conversion motorhome, other than the Ford or Fiat base vehicle, Swift will repair or, at its option, replace any defective parts or fittings for three years from the date of purchase (or hire purchase), subject to the conditions, terms, limitations and exclusions below. For the body shell, Swift will repair or, at its option, rectify any defect with the joints and seals including water ingress relating to modifications as part of the panel van conversion and floor delamination. The panel van warranty does not cover any parts of your motorhome that are covered by Ford or Fiat. An additional extension to this warranty cover is available as a cost option through your supplying dealer.

Base Vehicle Warranty – provided by Ford or Fiat

Your vehicle is a panel van conversion motorhome which utilises a Ford or Fiat base vehicle. Swift takes a panel van as supplied by and fits out the interior of the van for habitation. Ford or Fiat provide a manufacturer's warranty for the base vehicle supplied to Swift by them. For any issues with the base vehicle warranty please contact your local Ford or Fiat dealer. This Motorhome Warranty does not cover any parts of your motorhome that are covered by the Ford or Fiat manufacturer's warranty. Your base vehicle warranty is subject to the terms and conditions contained in the Ford or Fiat handbook supplied with the base vehicle and the vehicle must be serviced in accordance with Ford's or Fiat's requirements.

1.3 Swift Warranty Cover, Limitations and Exclusions

Component	Cover	Limit / note
Blinds	12 months	**Exclusions:** Wear and tear, misuse and slackening due to use.
Rusting hinges and catches	12 months	
Fly screens	12 months	**Exclusions:** Accidental misuse.
Self-levelling system/air suspension	24 months	**Exclusions:** Misuse and improper operation causing damage.
Carpets	12 months	**Exclusions:** Environmental damage and handling damage.
Paint defects including gelcoat cracks	3 years	After 3 years body-shell cover applies only where confirmed water ingress is caused by cracking. **Exclusions:** Damage caused by a heat source.
Water ingress	3 years	Through non-permanently sealed joints, including windows, hatches, habitation doors, sunroofs and roof-lights, only relating to panel van modifications.
Furniture adjustments	90 days post registration	Locker hinges are designed to be adjustable.
Elevating roof and roof tent	12 months	**Exclusions:** Misuse and improper operation and failed maintenance including weatherproofing
Electrical system	3 years	PSU, battery charger, Smart Command, solar panels and interior lighting units. **Exclusions:** Consumables, including bulbs, fuses, filters, seals, brushes, batteries and gas regulator hoses. Leisure battery capacity loss from deep discharge, prolonged storage without charge, or charging outside the recommended regime. Solar yield, battery runtime. Damage caused by connection to non-compliant mains supplies, generators or inverters, or by aftermarket electrical fitment.

Component	Cover	Limit / note
Water system	3 years	Water heater, freshwater tank, water pump, water gauges, taps and shower head. **Exclusions:** Frost damage to pipework, pumps, taps, water heaters and waste systems where the system was not drained down. Blockages, limescale, contamination and taint from site water supplies, and damage from unapproved sterilising or antifreeze chemicals. Pump noise, tap drip on shut off and minor flow variation within normal operating characteristics. Cassette and flush system faults caused by unapproved chemicals or by foreign objects.
Cooker/Air Fryer/Induction Hob	3 years	Grill, oven, burners, igniter and flame failure device.
Refrigerator	3 years	Gas igniter, flame failure device, door seal condenser, gas control valve, 12V and 230V heater elements, gas thermostat, 230V thermostat and 230V temperature control switch. **Exclusions:** Fridge performance falling short of expectation where the system meets its published specification.
Cassette toilet	3 years	**Exclusions:** Seals, valves and glands and damage through misuse.
Heating system	3 years	Thermostat, motor, switches, control unit, gas heater, flame failure device and igniter. **Exclusions:** Ducting, fittings and, heating recovery time and falling short of expectation where the system meets its published specification. Appliance faults/fault codes refer to manufacturers troubleshooting guide for further information.
Windows/ Window Rubber	3 years	Includes the functionality of the opening and closing system (stays, handles and catches) and a warranty against the cracking of the acrylic, not including crazing, clouding, fading or cracking of acrylic windows and rooflights where unapproved cleaners, solvents, insect repellents, screen sealants or abrasive cloths have been used or scratching from dry wiping or abrasive cleaning.
Upholstery/Soft Furnishings	12 months	Zips, seams. **Exclusions:** Compression marking on upholstery, foam softening, creasing, fabric pilling and sun fading of curtains and upholstery.

Component	Cover	Limit / note
Wall and roof GRP sheeting material	24 months	
Graphics/ Decals	3 years	**Exclusions:** Graphics/decal lifting or cracking where the vehicle has been pressure-washed at close range, polished using abrasives or treated with solvent cleaners.
Microwave	1 year	Extended warranty maybe available if you register directly with the manufacturer.
Factory Fitted Leisure Batteries	Direct manufacturer's warranty	Please refer to manufacturers' warranty located in your vehicle.
Factory Fitted Thule Awning	12 months	**Exclusions:** Damage arises from duty cycle, bowing, creasing, fabric stretch, wind, snow or storms; where equipment is left deployed unattended; or where it is rolled away wet.

- Swift is not liable under the Swift Warranty where the leisure vehicle has been neglected, misused, modified, used for private hire or reward, or where identification marks have been removed or defaced.
- Cover does not include fair wear and tear, accidental damage, or damage caused by freezing, fire, overheating, accidents, corrosion, failed routine maintenance, cleaning or adjustment, condensation, abrasive cleaners, or foreign or harmful substances or objects, including, but not limited to, tree sap, rodents, animal or bird faeces, salt and stone chips.
- Cosmetic finish to kitchen sinks, cooker tops, vanity units and shower trays.
- Cosmetic finish is assessed from approximately one metre away, in normal diffuse light and at a normal viewing angle. Defects visible only in direct sunlight, raking light, close inspection or under magnification are not considered defects.
- Fading, chalking, and reduction in gloss resulting from ultraviolet exposure over time.
- Damage or water ingress resulting from holes being drilled, fixings being added, or aerials, solar equipment, satellite equipment, towbars, racks or other accessories being fitted by a third party after despatch.
- Natural variations in timber grain, veneer colour, fabric weave, leather marking and GRP gelcoat texture are inherent characteristics of the materials and are not considered faults.
- Distortion or damage resulting from overloading lockers, beds or the roof beyond the stated limits.
- Routine maintenance items forming part of the annual service, lubricants, rubber gas hose, cleaning of heater and refrigerator flues, replacement of gas jets, resealing and/ or replacement of shower-room sealant, and adjustment and lubrication of locks.

1.4 Warranty Conditions - Annual Service and Inspection Records

Annual Service Requirements to Maintain Your Warranty

- To maintain your warranty, your leisure vehicle must undergo a full annual service and inspection, including a moisture survey. The service must be completed by an authorised Swift Service Centre or a service agent that is a member of the National Caravan Council's Approved Workshop Scheme (AWS).
- The final annual service within any warranty period must be completed before the warranty period ends. All other annual services may be completed within six weeks on either side of each anniversary of the original purchase date.
- Your authorised service provider should register the completed service on the Swift Connect portal.
- Please retain the original VAT invoices as evidence that each annual service has been completed. If proof of servicing is requested, you will need to provide a copy of the relevant service invoice. Failure to provide satisfactory proof of servicing may invalidate the warranty or prevent its transfer following a change of ownership.
- If your leisure vehicle does not receive its annual service in accordance with the requirements set out in this handbook, Swift will not be obliged to carry out work under the applicable warranties. You are responsible for any charges associated with the annual service. If the service is completed by an unauthorised repairer or service centre and has not been carried out in accordance with this handbook, Swift will not be obliged to carry out work under the warranty.
- The annual service and inspection should take approximately two to four hours and must cover the areas listed in the annual service checklist below.

Your dealer or service provider will identify any areas requiring servicing, maintenance, or repair. We recommend that you authorise any necessary work to be completed.

To maintain the validity of the warranty, the annual inspection must be completed by an authorised Swift Group Service Centre or an NCC Approved Workshop or service engineer.

The inspection must cover all applicable items listed below.

1. Damp and lamination test, including a visual inspection of the bodywork and seals.
2. Motorhome step
3. Internal lights and 12V DC system.
4. Water heater - gas and 230V AC (if fitted).
5. Hob, grill and oven (if fitted).
6. Refrigerator 230V AC, 12V DC and gas.
7. Gas system.
8. Water pump, taps and water system.
9. Mains 230V AC system.
10. Windows and fittings.
11. Smoke alarm and battery.
12. Rooflights.
13. Furniture hinges, stays and associated fittings.
14. Exterior locks and hinges.
15. All internal vents.
16. Seals, including shower.
17. Blinds and fly screens (if fitted).
18. Carbon monoxide detector.
19. Blown air heating and gas fire systems
20. Drop down bed operation if applicable
21. Elevating Roof

Making a Warranty Claim or Updating Ownership Details

- Contact the dealer that supplied the leisure vehicle. If this is not possible, use the dealer and service-centre finder at www.swiftgroup.co.uk, select "Owner" and then "Find a Dealer".
- Quote the leisure vehicle serial or chassis number when requesting assistance.
- No repair, including the fitting of a replacement unit, may begin under the warranty without prior written authorisation from Swift, obtained through a Swift-approved dealer or Swift-approved service centre. Swift will not accept liability for warranty work that has not been authorised in this way.
- Swift reserves the right to examine the vehicle before any repairs commence, or any replacement part is fitted.

- The owner is responsible for transporting, towing, or otherwise moving the leisure vehicle to and from the repair location. Swift will not reimburse associated expenses, including loss of use, pitch fees, ferry or site costs, accommodation, recovery, travel, loss of earnings or other consequential losses.
- Warranty cover does not include personal belongings or damage to them.
- Warranty cover does not include routine servicing, adjustment after the settlement period, cleaning or valeting.
- Warranty cover does not include vehicles used for hire, reward, commercial letting or permanent residence, unless specified otherwise.
- Warranty cover does not include a vehicle modified from its build specification where the modification affects the item being claimed for.
- After-sales parts are not available directly from our manufacturing facility. Please contact a local Swift dealer or service representative.

Warranty provider: Swift Group Limited, Dunswell Road, Cottingham, East Yorkshire, HU16 4JX

1.5 Change of Ownership

Second or subsequent owners may be entitled to the remainder of the existing warranty, subject to the warranty transfer requirements below.

- A £50 warranty transfer fee applies. Please contact transferofownership@swiftleisure.co.uk
- The warranty transfer must be completed within three months of the change of ownership.
- Applicants must provide a full annual service history together with proof of purchase, such as a VAT receipt, invoice, bank statement or card statement. Note you will need to inform Ford or Fiat UK of any change of ownership relating to the base vehicle warranty.

1.6 My Swift Life

Are You Member Of 'My Swift Life'?

My Swift Life is an online customer portal service. Please visit www.myswiftlife.co.uk and select register or scan the QR code below.

ⓘ Note: You will need to inform Ford or Fiat UK of any change of ownership relating to the base vehicle warranty.

1.7 Contacting Swift

Should you have an enquiry or require assistance with a problem, we hope that this guide will be of assistance to you. Please follow these steps: Check the Owners Handbook, paying particular attention to the fault-finding advice at the back of the book. Contact your supplying dealer for assistance. If you need to contact Swift

Group please email - enquries@swiftleisure.co.uk, please remember to quote your chassis number of your motorhome. This can be found on the weight plate labels.

In most instances, the Customer Experience Team will involve your dealer in resolving the issue you are experiencing. By contacting the Swift Group, you are authorising the Swift Group to share your details with your dealer.

1.8 Supplier contacts

A number of Swift Group suppliers manage their own Technical and Warranty related queries. Where a customer has a question relating to a product manufactured by a company listed below, we would advise that the first contact should be directly with them.

SARGENT	**Sargent Electrical Services** Unit 39, Tokenspire Business Park,Beverley, East Yorkshire, HU17 0TB Phone: 01482 678981 Fax: 01482 678987 E-mail: support@sargentltd.co.uk	https://sargentltd.co.uk
truma	**Truma UK Ltd.** Park lane, Dove Valley Park, South Derbyshire, DE65 5BG Phone: 01283 587960	https://www.truma.com/gb/
THETFORD	**Thetford Ltd.** Unit 6, Brookfields Way, Manvers, Dearne Valley, Rotherham, South Yorkshire, S63 5DL Phone - 0844 997 1960	https://thetford.com/en/
DOMETIC	**Dometic (UK) Ltd** Dometic House, The Brewery, Blandford St Mary, Dorset, DT11 9LS	https://www.dometic.com/en-gb/outdoor
Whale	**Whale** 2 Enterprise Road, Bangor, Co. Down, Northern Ireland BT19 7TA Phone: 0345 9090 911 Email: info@whalepumps.com	https://whale.navico.com/caravan-motorhome/

2. Motorhome code

2.1 Camp sites 15

2.2 Wild camping 16

2.3 Handbooks (Chassis & Converter) 16

2.4 The Country code 17

2.5 The coastal code 17

1.4 Annual service / inspection record

In order to comply with the warranty, you must have your motorhome inspected and serviced in accordance with the warranty.

We highly recommend that you have your Motorhome serviced by a Swift Group Approved Service Centre who have direct access to our online Customer Service system, My Swift Life. This system provides them with the ability to order approved parts and ensure that any product upgrades which may be available for your Motorhome can be offered to you and carried out as part of the service. In the unfortunate event that an issue requires attention under warranty then a Swift Group Approved Service Centre are able to submit a warranty claim to the Swift Group for processing, and deal with the issue for you from start to finish. All of our Swift Group Approved Service Centres are provided with up to date technical information and have access to current repair methods giving you peace of mind that any defect has been repaired effectively.

It is important that the owner's handbook is stamped on the appropriate page by the authorised Swift Group Service Centre.

Failure to do this will invalidate the warranty and the transfer of the warranty on the change of ownership.

The inspection should take approximately two hours and will cover the areas dealt with in the annual service check list. Any areas requiring service and/or maintenance will be highlighted by your dealer and we recommend that you authorise any necessary work to be carried out.

Just as the engine/gearbox/roadwheels need regular servicing by your chassis dealer, so there are components in your conversion that need regular maintenance by your motorhome dealer.

These include the applicable parts of the installed systems, and the seals in the bodywork. Your dealer will complete the record in this handbook to show that the work has been carried out.

1. Damp and lamination test.
2. Chassis and chassis to body security.
3. Motorhome step.
4. Road lights, wiring and reflectors.
5. Internal lights and 12V DC system.
6. Water heater - gas and 230V AC.
7. Hob, grill and oven.
8. Refrigerator 230V AC, 12V DC and gas.
9. Gas system.
10. Water pump, taps and water system.
11. Mains 230V AC system.
12. Windows and fittings.
13. Roof lights.
14. Furniture hinges/stays etc.
15. Exterior locks and hinges.
16. All internal vents.
17. Seals.
18. Blinds and fly screens.
19. Blown air heating systems.
20. Smoke alarm and battery
21. Carbon monoxide detector and battery

2.1 Camp sites

Arrivals

Report to reception immediately on arrival.

Vehicle Movement

Keep to roadways unless otherwise directed. Adhere to speed limits. Note that these are generally 10 mph. (Remember that the stopping distance on grass is considerably greater than on tarmac.)

Only a person in possession of a current driving licence may drive on the site.

Park correctly as advised on your pitch. Where possible leave 20 feet of free space around your vehicle.

Use of Site Appliances

Use the electrical mains hook-up in the correct manner and with caution. Ensure that all fresh water taps/connections are turned off after use. Have care and consideration when using all facilities (toilets and showers etc) and leave clean and tidy. Young children should be supervised.

Waste Disposal

If the vehicle is not fitted with a waste water tank, a suitable receptacle should be placed below all waste water outlet pipes. Do not let these containers overflow. Dispose of all waste water where instructed. Empty effluent from chemical toilets where instructed.

To avoid possible damage to sewage purification works, only approved chemical fluids must be used. Under no circumstances should coal tar, phenol or caustic-based fluids be used.

Disposable nappies and similar bulky items must not be put into chemical closet emptying points but should be wrapped in a polythene bag and placed in the container provided.

Place all litter in containers marked for the purpose.

Noise

Do not make excessive noise. Children should be restrained from making excessive noise.

Flying kites, drones and model aircraft, and the use of items like catapults or air-guns, as well as ball games, should not be permitted among, or close to other vehicles.

Musical instruments, record players, radios and televisions should not be used to the inconvenience of other people on the site.

Open and close doors quietly. Power generators must be adequately silenced and used with consideration.

Dogs and other Pets

All dogs and other pets should be kept under control. Unless permission has been granted, no animal should be allowed loose on the site and leads must not exceed 10ft.

No animals should be allowed in the shower/ toilet blocks.

Do not let dogs foul the site.

Fire Precautions

Adhere to and take note of fire precautions noting the whereabouts of the fire points.

⚠ **WARNING:** Provide one dry powder fire extinguisher of an approved type or complying with EN3-7 or ISO 7165, of at least 1kg capacity, by the main exterior door and a fire blanket next to the cooker. Familiarise yourself with the operating instructions on your fire extinguisher and the local fire precaution arrangements.

When using a dry powder extinguisher it is suggested that the motorhome be evacuated until the powder has settled, to avoid inhalation.

Code of conduct

Unless permission has been granted, barbecues should not be used. If permission is given, consideration should be given to the annoyance that can be caused to other users of the site.

Open fires are not allowed.

Awnings and Tents

Awnings and tents should only be used when permission has been obtained. When on grass and staying for more than a few days, the ground sheet and/or side flaps of awnings should be periodically raised in order to avoid damage to the ground.

Departure

Leave the pitch clean and tidy.

On leaving, check out with reception paying the required fees.

2.2 Wild camping

Camping away from licensed sites, without the permission from the land owner or his agents, is not allowed in the United Kingdom.

When permission has been granted, all aspects of this Code should be adhered to.

On no account should:

a. Litter be disposed of other than in the receptacles provided.

b. Water be allowed to escape from the vehicle.

c. Chemical toilets be emptied except into the disposal places agreed with the land owner.

d. Washing or similar be hung outside the vehicle.

Parking

Motorhomes should only be parked in approved places.

When using the facilities of a motorhome, care and consideration should be given to those around them.

Driving

Before moving off, elevated rooflights and aerials should be lowered and correctly secured, and top hinged windows closed. Likewise all doors and access lockers for gas containers and chemical toilets must be properly secured.

Exterior steps should be properly retracted and secured. When the vehicle is in motion it is compulsory for all front seat passengers and rear seat passengers to wear seat belts, where fitted. When using a motorhome on either the public highway or private roads the Highway Code should be complied with and full consideration given to other road users.

In the event of a motorhome travelling slowly the driver of the motorhome should, where possible, pull over in order to let other traffic pass.

⚠ **WARNING:** When travelling, refuelling or on a ferry ensure the gas system is fully isolated at source.

2.3 Handbooks (Chassis & Converter)

Before using a motorhome all aspects of the handbooks, produced by the chassis manufacturer and the converter, must be read and adhered to.

The separate chassis manufacturer handbook refers to your motorhome chassis and base vehicle including care and maintenance.

https://aftersales.fiat.com/eLum/Home.aspx?id_laguage=2&id=lilFA2iRtH3LFH6XUlVExzlzYVfo7nRJHnoVkS0CHHeaOYMbOX%20PdWd3R7M970ARiQJrFBspXWOg0sThO5Vquw==

Environment

Care and consideration should be taken to protect the environment. Observe the Country and Coastal Codes.

2.4 The Country code

Enjoy the countryside but respect its life and work.

More people than ever before are exploring the countryside, interested in farming, plant life, bird watching or just observing the general wildlife. Whatever your interest, there is a lot to learn, but please observe the following code:

1. Guard against all risk of fires. Hay and heathland catch alight easily and once ablaze are very difficult to put out.

Remember: fire spreads quickly.

2. Fasten all gates.
3. Keep your dog under proper control.
4. Keep to the paths across farm land.
5. Avoid damaging fences, hedges and walls.
6. Leave no litter.
7. Safeguard water supplies.
8. Protect wildlife, wild plants and trees.
9. Go carefully on country roads.
10. Respect the life of the countryside. The Coastal code

2.5 The coastal code

As our coastlines are increasingly used for recreation and education, the following suggestions are made to enable us to enjoy our inheritance and preserve it for posterity.

Do not trample about, or move rocks unnecessarily.

Do not frighten seals or seabirds.

Do not spill detergents, solvents or fuel from boats as these can kill marine life.

When sailing, moderate your speed - the wash from a fast boat can destroy banks and nests.

Live molluscs and crustaceans need not be collected as souvenirs - dead shells can usually be found.

Shellfish can take years to grow and fines can be imposed for not observing national regulations.

Do not pull up seaweeds unnecessarily. Make your visit instructive - not destructive.

Look at material - don't remove it. Take notes and photographs, not specimens.

Observe by-laws and be considerate to others.

National Trust property and Country Parks have regulations to protect the wildlife. Follow these and the Country and Coastal Codes.

3. Preparing for the road

3.1 Before moving off 20

3.2 Motorhome terms 20

3.3 Loading of vehicle 21

3.4 Large storage areas 22

3.5 Tyres 22

3.6 Dedicated travelling passenger seating 22

3.7 Child seats 23

3.8 Airbag 24

3.9 ISOFix Child Seat Restraint 24

3.10 Three point seat belts 25

3.12 Advice on towing 26

3.13 European Touring 27

3.1 Before moving off

Check:

- Loose articles are stowed securely. Do not stow tins, bottles or heavy items in overhead lockers.
- All lockers and cupboard doors are closed and secured.
- Tables are stored or locked in their transit position.
- Fridge is on 12V or auto operation and door lock is set.
- 230V mains input socket flap is securely closed.
- All drain valves are closed.
- Tyre pressures
- Exterior roof rack ladder / bike rack is secured (where fitted).
- All windows/doors/rooflights are closed and secured.
- Exterior step (where fitted) is retracted / folded in.
- Special attention must be taken to ensure all top hinged windows as well as rooflights are closed when in transit. All units should be fully closed and latched to prevent damage. The motorhome rear and side sliding door should also be locked.
- Road worthiness of your vehicle (oil level, tyre pressure, road lighting)
- The elevating roof is fully down with catches and retainers secure.
- The panel van rear and side sliding doors are locked.

⚠ **WAR**NIN**G:** Large and/or voluminous items should be stored securely before travelling.

3.2 Motorhome terms

Mass in Running Order:

The mass of the motorhome equipped to the motorhome manufacturers standard specification, as stated by the manufacturer.

The MRO comprises the ex-works weight of the motorhome, including the driver, 90% fuel capacity, Adblue & windscreen washer fluid 100% full, and standard fixtures & fittings in compliance with European Regulation No. 1230/2012 (Masses & Dimensions)

ⓘ **Note:** The mass of the motorhome in running order contains provision for the masses of liquids etc. (See Mass in Running Order in the Technical Section).

ⓘ **Note:** If you travel with water in the fresh water tank or waste tank, the payload will be reduced accordingly.

ⓘ **Note:** Quoted MRO is subject to tolerance, due to weight variation of materials used in Motorhome construction.

Maximum User Payload:

The maximum allowable weight to be put into the motorhome whilst it is being driven. This is made up of 4 sections:

Personal effects, conventional load, optional equipment and essential habitation equipment.

The Maximum User Payload is the difference between the Maximum Technically Permissible Laden Mass and the Mass in Running Order.

Personal Effects:

Those items which a user can choose to carry in a motorhome and which are not included as Essential Habitation Equipment or Optional equipment.

Conventional Load:

A mass allowance of 75kg for each designated passenger seat

Optional Equipment:

Items made available by the manufacturer over and above the standard specification of the motorhome.

Essential Habitation:

A mass allowance for liquids in systems not accounted for within the MRO.

Maximum Technically PermissibleLaden Mass:

The maximum weight for which the motorhome is designed for normal use when being driven on a road, laden.

This mass takes into account specific operating conditions including factors such as the strength of materials, loading capacity of tyres etc.

Gross Train Weight:

The maximum combined weight of the motorhome and trailer.

⚠ **WARNING:** Under no circumstances should the axle loadings or the Maximum Technically Permissible Laden Mass of the motorhome be exceeded.

Nose weight on towed trailers:

The static mass of the trailer towing device on the rear of the towing vehicle.

When measuring the noseweight it is important that the trailer is loaded.

The trailer is intended to be towed slightly nose heavy. The nose weight can be adjusted by distribution of the load. The nose weight should be approximately 7% of the actual laden weight (but not greater than the hitch capacity) and at the same time suit the motorhome requirements. See 'Advice on Towing' page 28.

3.3 Loading of vehicle

⚠ **WARNING:** Loads must not be exceeded. The driver is responsible for arranging the loads so that they comply with the technical weight limits of the specific motorhome model.

See Technical handbook.

Correct weight distribution is an important factor in ensuring your vehicle is well balanced and easy to drive. It is therefore necessary to load your motorhome carefully making sure all heavy articles are evenly distributed and are preferably placed in the lower lockers or bed boxes.

⚠ **WARNING:** Do not travel with televisions or microwaves in overhead lockers unless the appliance was supplied fitted to your motorhome by the manufacturer.

Although it is essential to ensure that the total weight of your motorhome does not exceed the stipulated Maximum Technically Permissible Laden Mass, (MTPLM), it is important to remember that the front and rear axles also have individual maximum weights which must not be exceeded.

To ensure adequate road holding the load on the front axle, under all conditions, must not be less than 40% or more than 70% of the total weight.

Ensure you distribute the payload equally on each side of the vehicle to avoid an imbalance.

These weights, together with the MTPLM, can be found on the statutory plate affixed to the passenger door B pillar.

⚠ **WARNING:** Please take care to ensure you have allowed for the masses of all the items you intend to carry in your motorhome e.g. passengers, optional equipment, essential habitational equipment and personal effects such as clothing, food, pets, bicycles, sailboards and sports equipment etc.

ⓘ **Note:** Care must be taken to ensure that exterior doors are closed, locked and that all possessions are properly stored and secured before setting off on any journey.

3.4 Large storage areas

The large storage areas provided in some motorhome layouts are designed solely for the purpose of carrying personal possessions, these areas must not be used:

- As a habitation area (eg living, sleeping or cooking).
- To carry passengers, animals or livestock.
- For the installation (or use) of any LPG gas operated appliances (unless supplied fitted by the manufacturer).
- For carrying LPG gas cylinders.
- To carry any flammable liquids, unless properly stored, sealed and secured.
- For the operation of an electrical generator.
- In such a way that the load exceeds the MTPLM, and/or minimum and maximum axle loads.

Care must be taken to ensure that exterior doors are closed, locked and that all possessions are properly stored and secured before setting off on any journey.

3.5 Tyres

If a wheel or tyre is changed any replacement must be of the same type of construction and size.

The law requires that the tyres and pressures must be suitable for the use to which they are being put. The minimum tread depth must be 1.6mm throughout a continuous band comprising the centre three-quarters of the breadth of the tread and around the circumference of the tyre.

Please refer to the base vehicle manufacturer's handbook for tyre pressure information. This may also be displayed in the driver's or passenger's door aperture.

The motorhome tyre pressure noted in the Technical book are the pressures stated by Fiat for your vehicle calculated in a fully laden condition. If you are not running fully laden, reduced pressures could be used but please seek clarification from the tyre manufacturer.

3.6 Dedicated travelling passenger seating

Seat belts are fitted to all travelling seats. Travelling seats are designated by the manufacturer and vary according to the layout you have purchased. Each seat is homologated i.e. tested to all relevant safety requirements. NEVER travel in or attempt to install a seatbelt to a non-designated seat.

⚠ **WARNING:** Side facing seats are designed for habitational use only, not for when the vehicle is in motion.

Seat belts and legislation

Designated driver and passenger seats are fitted with seat belts and MUST be worn when travelling.

Children, aged up to 3 years of age, must wear an appropriate child restraint suitable for their age and weight. Children from 3 years of age and up to 135cm (4'5") in height, or 12 years of age, whichever is reached first must use a child car seat or booster seat suitable for their age.

Children over 135cm (4'5") in height or aged 12 years and over must wear a seat belt.

ⓘ **Note:** It is the legal responsibility of the driver to ensure children aged up to 14 years old are suitably restrained. For passengers aged 14 and over, it is their responsibility (not the driver) that a seat belt is worn.

Seat belts are fitted for your safety and must be worn unless a 'Certificate of Exemption from Compulsory Seat Belt Wearing' is held. This Certificate must be produced if asked for by the Police – seat belt offences can result in a fine.

3.7 Child seats

Choosing/Buying

Go to a reputable retailer such as Halford's, Smyths, John Lewis etc. Most reputable retailers will have trained child seat advisers on site and will offer a fitting service. Ask the advisor to fit various seats to the vehicle. Once a correctly fitted seat has been installed, satisfy yourself on it's suitability for your child and the vehicle before buying as it is important to use a correctly fitting seat in your motorhome.

⚠ **WARNING:** The child seat you use in your car may not be suitable for mounting on a motorhome seat.

⚠ **WARNING:** Choose the right seat for your child's height and weight.

Height-based seats

Height-based seats are known as 'i-Size' seats. They must be rear-facing until your child is over 15 months old. Your child can use a forward-facing child car seat when they're over 15 months old.

You must check the seat to make sure it's suitable for the height of your child.

Only EU-approved height-based child car seats can be used in the UK. These have a label showing a capital 'E' in a circle and 'R129'.

Weight-based seats

The seat your child can use (and the way they must be restrained in it) depends on their weight.

Only EU-approved weight-based child car seats can be used in the UK. These have a label showing a capital 'E' in a circle and 'ECE R44'.

You may be able to choose from more than one type of seat in the group for your child's weight.

For more information visit www.gov.uk

Never fit or use a second hand car seat. It could have been damaged and may not meet modern standards. The fitting instructions may also be missing.

Positioning/Fitting

Dependant upon the child seat type, the most suitable position for the child seat to be fitted may be the front passenger seat of the cab (NOTE airbag advice on following page) or the forward facing rear seat.

If using a seat with ISOfix, the position would be on the aisle seat with the ISOfix brackets on the seat frame. The top tether is at the top of the seat frame between the headrest height adjustment bars. Raise the head rest to gain access to the tether. (See section 3.9)

If using a seat without ISOfix, the window seat is recommended. The aisle seat is NOT a recommended position for this type of seat.

Advice should always be taken from the retailer on the suitability and security of the seat in the motorhome. Read and follow the child seat manufacturer's instructions for fitting the seat.

All Swift motorhomes are fitted with inertia reel seat belts, however, the child seat must be tight in the adult seat. Push all your weight into the child seat as you tighten the belt.

Keep a copy of the child seat fitting instruction in the motorhome for easy reference.

Any doubts, ask an advisor to show you how to correctly install the seat.

3.8 Airbag

Never fit a rear facing child restraint in a seat with an active airbag in front of it.

Forward-facing child restraints should be positioned as far back from the airbag as possible. Check the base vehicle handbook.

⚠**WARNING:** Extreme Hazard! Never use a rearward facing child restraint on a seat protected by an active airbag in front of it. Death or serious injury to the child can occur.

⚠**WARNING:** You must switch the passenger airbag off when using a rearward facing child restraint on the front seat.

⚠**WARNING:** You must switch the passenger airbag on following the removal of the child restraint.

⚠**WARNING:** Do not modify child restraints in any way.

⚠**WARNING:** Do not hold a child on your lap when your vehicle is moving.

⚠**WARNING:** Do not leave children or pets unattended in your vehicle. Failure to follow this instruction could result in personal injury or death.

⚠**WARNING:** If your vehicle has been involved in a crash, have the child restraints checked.

⚠**WARNING:** Do not put the shoulder section of the seatbelt or allow the child to put the shoulder section of the seatbelt under their arm or behind their back. Failure to follow this instruction could reduce the effectiveness of the seatbelt and increase the risk of injury or death in a crash.

⚠**WARNING:** Do not use pillows, books or towels to boost your child's height. Failure to follow this instruction could result in personal injury or death.

⚠**WARNING:** Always make sure your child is secured properly in a device that is appropriate for their height, age and weight. Child safety restraints must be bought separately from your vehicle. Failure to follow these instructions and guidelines may result in an increased risk of serious injury or death to your child.

3.9 ISOFix Child Seat Restraint

⚠**WARNING:** Use a top tether anti-rotation device when using the ISOFIX system.

Do not use a child restraint with a support leg. Top tethers must be used.

⚠**WARNING:** Only child restraints certified to ECE-R129 or ECE-R44.03 (or later) have been tested and approved for use in your motor home.

The rear aisle seat is fitted with ISOFix anchor points that accommodate universally approved ISOFix child seats. Top tether anchorage points are also provided. The seats are not suitable for child restraints that require a support leg as the seats are too high above the floor. Only use child restraints provided with top tethers.

The ISOFIX system comprises two rigid attachment arms on the child seat that attach to anchor points on the rear seat frame, located where the cushion and backrest meet. Positions are marked on the cushions.



Top tether anchor points are fitted on the top of the upper seat frame cross bar, under the headrest and are accessed by lifting/removing the headrest.



General Seat Installation Method:

1. Place the child seat on the seat cushion.
2. Remove the seat headrest
3. Route the tether strap to the anchor point and secure.

4. Push the child seat back firmly to engage the ISOFIX lower anchor points.
5. Tighten the tether strap in line with the child seat manufacturer's instructions.

⚠**WARNING:** Please consult with the child seat manufacturer's instructions for full installation instructions. If in doubt please consult the child seat manufacturers technical support team for further guidance on the installation.

⚠**WARNING:** Do not attach the top tether strap to anything other than the correct top tether strap anchor point.

⚠**WARNING:** Make sure that the top tether strap is not slack or twisted and is properly located on the anchor point.

⚠**WARNING:** Make sure the child restraint rests tightly against the vehicle seat.

ISOFIX CHILD RESTRAINT POSITION INFORMATION

Seating Position		Lateral Facing	Rearward Facing	Rearward Facing	Forward Facing	Rearward Facing
		0 - 10 kg	0 - 10 kg	0 - 13 kg	9 – 18 kg	9 – 18 kg
Front Passenger	Size class[1]	No ISOFIX				
	Fixture[1]					
2nd row aisle seat	Size class	X	E	C, D, E	A, B, B1	C, D
	Fixture	X	R1	R1, R2, R3	F2, F2X, F3	R2, R3

[1]The size class and fixture are defined for both universal and semi-universal child restraint systems. You can see the identification letters on ISOFIX child restraints.

X Seat is not suitable for use with this size class of child restraint system.

3.10 Three point seat belts

This section refers to the seat belts located in the habitation area of your motorhome.

Fastening the seat belt:

Insert tongue into buckle; a positive 'click' indicates correct assembly.

Releasing the seat belt:

Press the red release button, the tongue will be ejected from the buckle.

- The belt is designed for use by one person and must not be put around a child seated on a person's lap.
- The belt on the outer seat is suitable for restraining most child seats and boosters. The aisle seat is only recommended for ISOFix child seats
- The belt should at all times be adjusted and used in accordance with the instructions. No excessive slackness should be present.
- Once installed the diagonal should pass across the centre of the shoulder and the buckle should lie just on or below the hip.
- Avoid twisting the webbing during use. Webbing must not be allowed to chafe against sharp edges.
- Do not make alterations or additions to the belt.
- Belts that have been cut, frayed, damaged or stressed through impact should be replaced. After impact the motorhome anchorage points should also be checked.
- To clean use warm soapy water only.
- Periodic inspection of the installation will ensure reliability of the seat belt.

3.11 Driving licence

Drivers who passed their car driving test (category B) before 1 January 1997 are usually allowed to drive a vehicle and trailer combination up to 8,250kg maximum authorised mass (MAM). You're also allowed to drive a minibus with a trailer over 750kg MAM.

The MAM is the weight of the vehicle or trailer which is listed in the owner's manual and is normally shown on a plate or sticker fitted to the vehicle or trailer.

Drivers who passed their test after 1997 can drive vehicles up to 3,500kg maximum authorised mass (MAM) with up to 8 passenger seats. Drivers can also tow a trailer that weighs up to 3,500kg MAM.

You must check you have the correct driving licence entitlement for the vehicle you drive.

3.12 Advice on towing

The towing capability of each motorhome differs depending on the specific chassis and engine types, (see 'Towing Capabilities Table' in your specification section).

This table takes account of the maximum front and rear axle loadings as well as the minimum front axle loading in two conditions, MRO and MTPLM condition.

Towing in these, and any other condition requires sensible loading and distribution of payloads to ensure the requirements of the towing capability table are met.

When towing, the demands on both the vehicle and driver increase. A trailer reduces manoeuvrability, the ability to climb hills, acceleration and braking capacity and makes the vehicle handle and corner differently. It will also increase the fuel consumption of the vehicle.

Always brake in good time. Special care must be taken when descending gradients. Change down before going down a steep hill so the engine can act as a brake. Ensure that the towing vehicle tyre pressures are correct and adjusted for full load conditions and that the trailer tyre pressures are as recommended by the trailer manufacturer. Regularly check the operation of trailer brakes and lights.

For maximum stability, when loading the trailer ensure that the loads are properly secured during transit. Position loads so that most of the weight is placed close to the floor and, where possible, immediately above or close to the axle(s). Where the load can be divided between trailer and tow vehicle, loading more weight into the vehicle will generally improve the stability of the combination.

After loading the trailer, check that the nose weight and axle loads are in accordance with the manufacturer's recommendations, also check the rear and front axle loads on the motorhome. When calculating the laden weight of the trailer, remember to include the weight of the trailer PLUS THE LOAD.

ⓘ **Note:** Towing regulations vary from country to country. It is very important to ensure that national regulations governing towing weights and speed limits are observed (refer to the relevant national motoring organisation for information). The stated maximum permissible towing weights refer to the vehicle's design limitations and NOT to any specific territorial restrictions.

Notes:

6. Do not exceed the motorhome gross vehicle train weight.
7. Do not exceed the maximum front & rear axle loads on the motorhome.
8. Ensure the motorhome front axle load is never less than 40% or more than 70% of the total weight.
9. Motorhomes with an MTPLM up to 3500kg which have European Type approval can only be fitted with a type approved towbar complying to 94/20/EC or UN ECE R55.
10. The limit for towing an un-braked trailer is 750kg (based on VIN plate not actual weight), this applies to a towed car.
11. A car dolly with a car with a GVW over 750kg in place is considered as two trailers, these are legal for use for recovery but under the Road Traffic Regulations Act 1984 the combination is limited to 40 mph on motorways and dual carriageways and 20 mph elsewhere. A car dolly is not legal for transportation (there is a very specific difference between recovery and transportation. Recovery is defined as the removal of a broken down vehicle to a place of safety).

12. The maximum permitted vehicle combination length is 18.75m, however any combination must ensure compliance with the turning circle requirements of Construction and Use regulations 1986 & EU 1230/2012.

ⓘ **Note:** Not all motorhomes are suitable for towing and may not have sufficient payload
to permit towing. If in doubt, consult your dealer.

3.13 European Touring

Please note there are a number of requirements placed on a driver when driving on European roads. Carrying a warning triangle, high visibility jacket, first aid kit and spare bulb is now compulsory in many EU states but some EU countries are now introducing further regulations such as carrying a breathalyser kit and not being able to use satellite navigation systems with speed camera warnings.

We would advise customers to check on the many web-sites available to ensure you are carrying the correct equipment when touring in those EU countries

4. En-route

4.1 Fix & Go Repair Kit (where fitted) 30

4.2 Inflation Procedure 31

4.3 Cruise control 32

4.4 Parking sensors 32

4.1 Fix & Go Repair Kit (where fitted)

CAUTION: Before use please read the user instructions supplied with your Fit & Go repair kit.

(For more details see Fiat user Manual)

If a spare wheel is not fitted within the specification of your vehicle, then a Fix & Go kit is supplied.

The Fix & Go automatic quick tyre repair kit is positioned at the front of the vehicle passenger compartment and includes Fig. A:



Fig.A

- Bottle A containing sealer and fitted with:
  - a transparent filler pipe B;
  - a black pressure restoring pipe E;
  - sticker C bearing the notice “max. 80 km/h”, to be placed in a position visible to the driver (on the instrument panel) after fixing the tyre;
- Instruction brochure (see fig. B), to be used for prompt and correct use of the quick tyre repair kit and then to be handed to the personnel charged with handling the tyre treated with the tyre repair kit;
- A compressor D complete with pressure gauge and connectors; a pair of protective gloves located in the side compartment of the compressor;
- Adaptors for inflating different elements

CAUTION: Give the instruction booklet to the tyre repair workshop personnel.

CAUTION: Punctures on the sides of the tyre cannot be repaired. Do not use the quick tyre repair kit if the damage is due to running with flat tyre.

CAUTION: If the wheel rim has been damaged (bent so as to cause air to leak), the wheel cannot be repaired. Do not remove the foreign body (screws or nails) from the tyre.

CAUTION: Punctures caused by foreign bodies can be repaired if the damage does not exceed 4 mm on the tread and on the shoulder of the tyre.

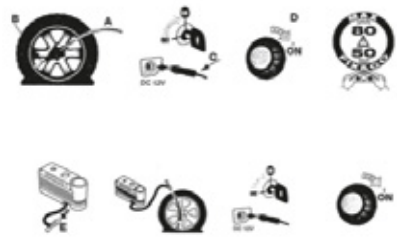

Fig.B

Important Information:

The sealing fluid of the quick tyre repair kit is effective at external temperatures of between -20 °C and +50 °C. The sealant has an expiry date.

CAUTION: The bottle contains ethylene glycol. It contains latex that might cause allergic reactions. It is harmful if swallowed. It is irritant for the eyes. It may cause sensitisation if inhaled or on contact. Avoid contact with eyes, skin and clothes. In the event of contact, wash immediately with plenty of water. Do not induce vomiting if swallowed. Rinse your mouth and drink plenty of water. Call a doctor immediately. Keep out of the reach of children.

The product must not be used by asthmatics. Do not breathe in the vapours during insertion and suction. Call a doctor immediately if allergic reactions are noted. Store the bottle in its proper compartment, away from sources of heat. The sealant

4.2 Inflation Procedure

CAUTION: Wear the protective gloves provided together with the quick tyre repair kit.

CAUTION: Affix the adhesive label in an easy-to-see position for the driver as a reminder that the tyre has been treated with the quick tyre repair kit. Drive carefully, particularly on bends. Do not exceed 80 km/h. Do not accelerate or brake suddenly.

CAUTION: If the pressure falls below 3 bars, do not drive any further: the Fix & Go automatic quick tyre repair kit cannot guarantee proper hold because the tyre is too much damaged. Contact a Fiat Dealership.

CAUTION: You must inform the dealership that the tyre has been repaired using the quick tyre repair kit. Give the booklet to the personnel who will be handling the tyre treated with the repair kit.

CAUTION: If different tyres from the ones supplied with the vehicle are used, it may not be possible to carry out the repair. If the tyres are replaced, it is advisable to use those approved by the manufacturer. Consult a Fiat Dealership.

- Pull the handbrake. Unscrew the tyre valve cap, take out the filler hose A (Fig. C) and tighten the ring nut B on the tyre valve;
- Insert the plug E (Fig. E) in the nearest 12V power socket and start the engine. Turn the selector D (Fig. D) anti-clockwise to the repair position. Activate the kit by pressing the on/off switch. Inflate the tyre to the pressure specified in the "Inflation pressure" paragraph, in the "Technical Data" chapter;

For a more accurate reading, it is advisable to check the pressure reading on the pressure gauge F (Fig. D) with the compressor off and without moving the centre selector from the repair position

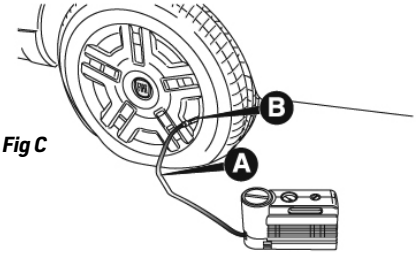

Fig C

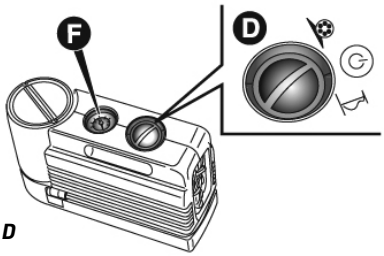

Fig D

- If after 10 minutes it is still impossible to reach at least 3 bar, release the transparent filler pipe from the valve and take out the 12 V plug, then move the vehicle forwards by about 10 metres in order to distribute the sealing fluid inside the tyre evenly, then repeat the inflation operation;
- If after this operation you still cannot reach at least 3 bar after 10 minutes, do not resume driving because the tyre is too damaged and the quick tyre repair kit cannot guarantee suitable sealing. Contact a Fiat Dealership;
- If the tyre reaches the pressure specified in "Inflation pressure" paragraph in the "Technical Data" section of the Fiat user manual start driving immediately;

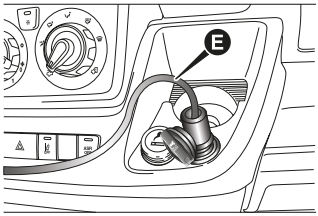

Fig E

after having driven for about 10 minutes, stop and recheck the tyre pressure; remember to apply the handbrake;

If a pressure value of at least 3 bar is detected, inflate to the correct pressure, resume driving and drive with care to nearest Fiat Dealership.

Bottle Replacement Procedure

To replace the bottle, proceeds follows:

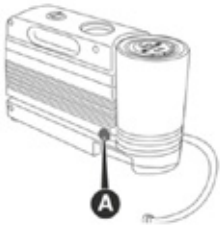

Fig. F

- press button A (Fig. F) to release the part;
- fit the new bottle and press until it is automatically engaged.

CAUTION: Punctures caused by foreign bodies can be repaired if the damage does not exceed 4 mm on the tread and on the shoulder of the tyre.

CAUTION: Replace the bottle containing the sealant after the expiry date. Dispose of the bottle and the sealant properly. Have the sealing fluid and the bottle disposed of in compliance with national and local regulations.

4.3 Cruise control

The driver of the vehicle should always remain seated and in control of the vehicle when cruise control has been engaged. Never leave the driving seat for any reason when the vehicle is underway

4.4 Parking sensors

Parking sensors are fitted to some vehicles. Please use the information provided. Use the sensors as a guide only. It is the responsibility of the driver to ensure it is safe to reverse the vehicle.

5. Safety and security

5.1 Fire 34

5.2 Smoke Alarm Operation 34

5.3 Fire Extinguisher 34

5.4 Escape paths 34

5.5 Children 34

5.6 Ventilation 35

5.7 CO alarm 35

5.8 Security 36

5.9 VIN CHIP™ 36

5.1 Fire

Note: Your attention is drawn to the notice affixed inside the wardrobe advising on fire precaution, ventilation and what to do in case of fire.

In case of fire

1. Get everyone out of the motorhome as quickly as possible using whichever exit is the quickest, including windows. Do not stop to collect any personal items.
2. Raise the Alarm. Call the Fire Brigade.
3. Turn off the electricity supply at supply point.

5.2 Smoke Alarm Operation



Your motorhome is fitted with a Fire Angel SB1 smoke alarm. Please read the user instructions for the smoke alarm, which are available at the following location:

https://www.fireangel.co.uk/products/sb1-r/

If you are unable to view the documents on line, please contact the supplier, your dealer or Swift for an electronic or paper copy.

⚠ **WARNING:** Never use portable cooking or heating equipment other than electric heaters that are not of the direct radiant type, as it is a fire and asphyxiation hazard.

⚠ **WARNING:** Appliances such as cookers must not be used for heating.

5.3 Fire Extinguisher

It is recommended that a dry powder fire extinguisher be carried inside your motorhome at all times.

When using a dry powder extinguisher it is suggested that the motorhome be evacuated until the powder has settled, to avoid inhalation.

A fat pan fire should not have a fire extinguisher aimed at it. It should be smothered with a fire blanket.

⚠ **WARNING:** Provide one dry powder fire extinguisher of an approved type or complying with EN3-7 or ISO 7165, of at least 1kg capacity, by the main exterior door and a fire blanket next to the cooker. Familiarise yourself with the instructions on your fire extinguisher and the local fire precaution arrangements.

5.4 Escape paths

In the event of an emergency, both the main entrance sliding door and rear door(s) are emergency exits on all layouts.

It is important that you do not block escape paths to emergency exits with obstructions or hazards.

5.5 Children

Do not leave children alone in the motorhome in any event. Keep potentially dangerous items out of reach, as at home e.g. matches, medicine etc.

5.6 Ventilation

All motorhomes comply with BS EN 721. The ventilation points on your motorhome are fixed points of ventilation which are required by the European Standards.

All motorhomes have ventilation at high level and low level which have been calculated to suit the individual needs of your motorhome.

High level ventilation is achieved by means of the roof lights and washroom roof ventilators (where applicable). The low level ventilators are positioned under furniture units.

Under no circumstances must these vents be blocked or obstructed in any manner as this could lead to insufficient fresh air. In this case the confined atmosphere becomes depleted of oxygen which could lead to dangerous levels of carbon dioxide (CO2) build up leading to the risk of asphyxiation.

The risks of carbon monoxide (CO) build up, which is a colourless, odourless and tasteless gas, will also be reduced with ventilation. Carbon monoxide is produced from incomplete combustion and should the CO detector be activated the cause of the incomplete combustion must be investigated prior to reusing the appliance in question.

It is advised that fixed ventilation points are checked and cleaned (if necessary) on a regular basis using a small brush and a domestic vacuum cleaner.

Additional night time ventilation is obtained by releasing the window catches and placing them in the second groove. Note the windows are not sealed from rain in this position.

As the ventilation levels are calculated to suit each model requirements no modifications should be made which may result in reduced ventilation levels.

⚠ **WARNING:** Do not obstruct ventilation.

5.7 CO alarm



Your motorhome is fitted with a FireAngel FA3820 Carbon Monoxide Alarm. To activate the alarm, you will need to pull the disabling tab. For further information, please read the instructions for the alarm, which are available at the following location:

bit.ly/3VZ5XOj

If you are unable to view the documents on line, please contact the supplier, your dealer or Swift for an electronic or paper copy.

5.8 Security

Motorhome theft:
The theft of a motorhome can occur in the most unlikely circumstances; from a motorway service area or even an owner's driveway. Secure all windows and doors when your motorhome is unoccupied even if only for a short length of time.

VIN (Vehicle identification Number)

Record your motorhome VIN which can be found on the lower edge of the base vehicle front windscreen and the plate located on the front cross member under the bonnet.

Make a note of these numbers in the space provided at the front of this handbook and make a separate note of the numbers to keep safe at home.

Additional security

Consider fitting any device which might deter intrusion by thieves. Customers are advised to identify their motorhome with a method for subsequent identification if other forms of identification have been altered or removed.

Free crime prevention advice about securing your motorhome, protecting your valuables, property marking either at home or whilst on site, can be obtained from the Crime Prevention Officer through your local Police station.

5.9 VIN CHIP™

Your motorhome has been securely marked and the VIN recorded with VIN CHIP™.

VIN CHIP™ is the industry standard security marking system for touring caravans and motorhomes.

Shortly after purchasing this motorhome. you will receive via email your VIN CHIP™ registration document. This document will include the 17 digit VIN (vehicle identification number) and other relevant details about your motorhome. If you sell your motorhome, please follow the instructions on the VIN CHIP motorhome document.

VIN CHIP identification

The motorhome's unique 17 character VIN will be incorporated into VIN CHIP tamper evident labels;

The master VIN CHIP label is situated on the front near side window to aid police checking, another in the gas locker and a maximum of 10 placed on the inside of the windows (with the exception of opaque windows).

Three electronic RFID chips containing the individual identity of your caravan are concealed within the motorhome and can only be read by using a specially programmed RFID scanner.

Your local police can obtain the use of a VIN CHIP™ scanner by contacting VIN CHIP on tel: 0203 282 1000.

For help, support and advice, contact:

VIN CHIP

Catherine House

Victoria Road

Aldershot

Hampshire

GU11 1SS

Tel: 0203 282 1000

www.vinchip.co.uk

6. Arrival at site

6.1 Positioning the motorhome 38

6.1 Positioning the motorhome

ⓘ **Note:** Check and observe site regulations.

Keep to roadways unless otherwise directed. Adhere to speed limits. Note that these are generally 10mph.

(Remember that the stopping distance on grass is considerably greater than on tarmac.)

Only a person in possession of a current driving licence may drive on the site.

Selecting a pitch

Do not pitch in such a position that your motorhome will obstruct others coming in.

Try to choose an area which is dry, reasonably level and preferably with a hard base.

If you have no alternative but to pitch on a slope try to ensure that you are facing down the slope, for when you leave.

Levelling the motorhome

Levelling must be carried out in both directions for the refrigerator and other equipment to function correctly. Stepped levelling boards (Fig. A) or proprietary ramps are ideal for this purpose. Levelling pads or boards should be used under the wheels where the ground is soft or uneven.



Fig. A

Awnings and Tents

Awnings and tents should only be used when permission has been obtained. When on grass and staying for more than a few days the ground sheet and/or side flaps of awnings should be periodically raised in order to avoid damage to the ground.

7. Connecting services

7.1 Water system - Introduction 40

7.2 Fresh water system 40

7.3 Priming the water system 41

7.4 Cleaning water system 41

7.5 Pressure switch 43

7.6 Waste water system 43

7.7 Tank heaters 44

7.8 Water level sensor & cleaning 44

7.9 The External Shower Point 45

7.10 Water fault finding 46

7.17 The electrical system 49

7.18 Overseas connection 49

7.19 230V mains electrical equipment power consumption 50

7.20 Connecting cable wiring 51

7.21 Typical appliance consumption 52

7.1 Water system - Introduction

All Swift Group motorhome water systems have been designed around a pump fitted within the motorhome. This pump draws water from an under floor or internal water tank, to provide water pressure within the water system, whenever it is switched on and water is available.

The schematic below shows the basic configuration of the water system:

WATER SYSTEM SCHEMATIC MOTORHOME WITH FITTED FRESH WATER TANK

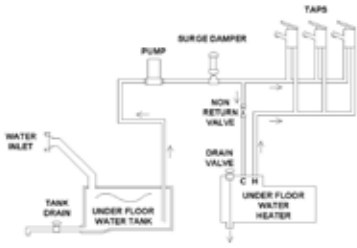

When power is supplied to the pump, it will draw water from the water tank, and pump it to the motorhome taps, shower and water heater.

The pump is fitted with its own pressure switch, and will continue to pump water, until the pressure of water on the output of the pump reaches a pre-set level. For this pressure to be achieved, the taps must be closed.

When the taps are opened, water will leave the tap via the spout, and the pressure in the pipes between the pump and the taps will reduce. Because of this reduction in pressure, the pressure switch on the pump will switch back on and the pump will again run to pump more water.

Close to the pump, the water under pressure is split into two paths:

1. Through blue water pipes routed directly to the cold connection of each tap.
2. To the water heater.

Water from the pump enters the bottom of the water heater. Once the water fills the water heater (typically 8 litres), water then leaves the water heater via a connection at the top of that water heater. This water, which is still under pressure, then routes to the hot connection of each tap via the red pipes.

To winterise the system please see separate details later in this handbook.

7.2 Fresh water system

All fittings, including the holding tank, water pipes, taps and connections are of food quality material (to BS6920) and therefore, should not affect the quality of the water used. It is recommended however, that the system is flushed through twice before it is used for the first time, and always cleaned/flushed after it has stood unused for a period of time (eg over the winter period). Care has been taken (using smooth bore pipes etc) to eliminate as many water traps as possible.

When filling the fresh water system remember to check that the water source is suitable for use as drinking water. If possible avoid using water sources which use desalination or other similar processing, as they may contain chemicals that could damage the stainless steel components within your motorhome water system. If in doubt, check locally before using a water supply.

The fresh water system is fitted with an electrically operated drain valve, which will drain the contents of the fresh water tank. The valve is controlled using a switch located in an upper locker, within the motorhome.

7.3 Priming the water system

When water is first introduced, or the water supply in the internal tank, runs out, air will be present in the pipework. It is important that every tap is run to remove any air in the system before, for instance, the shower is used. Air left in pipework local to a tap can act as an accumulator and affect the ratio of hot and cold water flowing from other taps or shower mixers in the system.

1. Close the water tank drain valve
2. Fill the water tank with water.
3. Close the water heater drain valve (see boiler instructions in the fitted equipment section)
4. Open all the taps except the shower tap. Mixer taps should be opened in the central position so that both the hot and cold pipes are purged of air. Ensure the tap spouts are over the sinks.
5. Turn on the pump using the button on the control panel (See pump button in paragraph 2.5 of the Electrics section).
6. Turn each tap off in turn as and when the air is expelled and the water runs smoothly from each tap. Move the mixer taps to hot and then cold to check that the air is out of both the hot and cold pipes before turning them off.
7. Whilst holding the shower head down towards the shower drain, open the shower tap and shower head tap until all the air is expelled and the water runs smoothly. Turn the shower taps off.
8. Top up the fresh tank with water.

Please note that priming the system will automatically fill the water heater with water.

Please ensure all taps are fully turned off when not in use (except when winterising).

ⓘ **Note:** All tanks are fitted with a breather which acts as an overflow. Overfilling a tank will result in water being expelled from the overflow.

7.4 Cleaning water system

Clean the water system at the start and end of the season with sterilising fluid.

Sterilising

When cleaning the water system at the start or the end of the season it is advisable to use a suitable sterilising fluid available from your motorhome dealer. The fluid must be suitable for use with stainless steel components.

Do not use products that contain aggressive agents, bleach or sodium metabisulphite for sterlising the water system.

Always flush the system thoroughly to remove any traces of the cleaning fluids.

The water systems, and in particular storage tanks, in motorhomes are susceptible to contamination by bacteria if care is not taken with their use and cleaning. The symptoms caused by bacterial contamination are not purely limited to gastro-intestinal diseases, but may also manifest themselves as ear, nose, throat, eye or skin infections. It is therefore important that you carry out the following procedure prior to using the motorhome each time, even if you boil or filter all water you use for drinking.

Separate Water Containers

1. All water remaining in the container should be disposed of so that the container is empty.
2. The outside of the container should be thoroughly cleansed and washed down to remove any dirt, dust or other contaminant.

   Water at a suitably hot temperature containing an appropriate detergent is recommended for this purpose.
3. Water should be put in the container, swirled around, then emptied out.
4. The container should then be totally filled with sterilising fluid mixed to the strength recommended by the manufacture of the sterilising fluid and allowed to stand for the recommended contact time.
5. The solution should be emptied from the container.
6. The opening of the container should be cleaned thoroughly with an appropriate prepared wipe impregnated sterilising fluid.
7. The container should be inverted whilst stored overnight (if possible).

8. The container must be filled with mains water only and mains water only should be used for the above cleaning procedure.
9. On no account should garden hoses be used to fill water tanks.

Motorhome water systems

1. Drain down the system by opening the tank drains and boiler/water system drain. (See section 7.2 for water tank draining) Open all taps to allow air into the system to enable the water to drain more quickly.
2. Remove any water filters fitted, and replace with a short length of hose or empty filter cartridge (this will ensure the filter is not affected by the sterilising fluid.
3. Fill the water system with sterilising fluid mixed to the strength recommended by the manufacture of the sterilising fluid. (check that the solution at full strength appears at all taps/showers). Allow to stand for the recommended period of time.
4. Drain the system completely.
5. Thoroughly clean the outside of all taps/ connectors with a cloth soaked in the disinfectant/sterilant.
6. Flush the system through with clean drinking water until no traces of sterilising fluid can be detected at any tap.

CAUTION: Never use the water heating system when sterilising fluid is present. Doing so may damage the system.



Lockable water filler inlet

Fresh Water Tank

Your motorhome is fitted with a water tank filled from the outside via a lockable water filler cap. When filling, use a hose manufactured from non toxic material, to prevent tainting of the water. Remember, if the water heater has been drained it will require 8 litre (1.7 gal) of water to fill it.

Within the inlet is a 12V socket which can be used to attach an external 12V filling pump (pump not supplied).

Boiler / Water System Drain

The Yellow boiler / water drain valve is located in the rear off side bed base, close to the Combi appliance. To drain the system, lift the valve to vertical (position 1 on the diagram below), to close the valve while the water system is in use, move the handle to either of the horizontal positions (2).

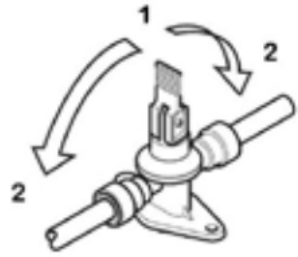

7.5 Pressure switch

The purpose of a pressure switch is to monitor the pressure on the outlet side of the pump. When a tap is closed, and the pump continues to run, there is an increase of pressure in the system, and when that pressure reaches a pre-set limit, the pressure switch will turn the pump off.

Pressure switch adjustment

Pressure Switch Adjustment, Truma/Flo-Jet pump. (Normally Grey upper section with White lower section/valve housing)

- All of the Truma/Flo-Jet pumps used by Swift are pre-set at 25psi - 31psi.
- To further adjust the pressure switch setting, a cover cap must be first be removed from the end of the pump to reveal a pressure adjusting screw, as shown in the photos. A maximum of 1/4 turn clockwise or anti-clockwise, from the factory setting, is advised. Turning the screw clockwise 1/4 turn will increase the pressure switch cut-out pressure, turning the screw anti-clockwise will reduce the pressure setting.Please note a second screw mounted below the cover cap is set in position with threadlock, this should not be disturbed

7.6 Waste water system

1. The waste water holding tank is secured below the floor of the motorhome, and is gravity fed.
2. In order to eliminate unpleasant odours as much as possible, only smooth bore pipes are used.

Should the waste water tank be overfilled, it is possible that waste water will backfill the pipes until it eventually appears in the shower tray. In order to prevent this, please monitor the water level gauges on the motorhome control panel. It is also possible to to enable a 'waste tank full' alarm, on the control panel.

The waste water tank is fitted with an electrically operated valve, which when opened will drain the contents of the waste water tank. The valve is controlled using a switch within the motorhome, located in an upper locker.



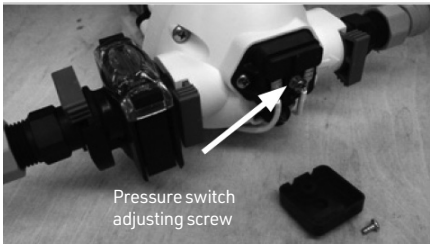

The pump may have to be removed to gain access to the adjusting screw. Drain the water system before removing the pump. To remove the pump pull the blue taps at right angles to the pipe work and lift the pump out.

7.7 Tank heaters

Depending on specification, your motorhome may be fitted with 12v tank heaters, designed to prevent or reduce instances of freezing water in fitted water tanks.

If tank heaters are fitted, they can be turned on via the control panel feature above the entrance door (see 8.7). Turn this feature on when the external temperatures are low, and the tank heaters will then turn on and off automatically.

Before heating each tank the system will check that the water level in each tank is at the 1/4 level or higher (the heaters will not operate if the tank is 'empty'). If the water level is appropriate, the heaters will then switch on and off depending on temperature.

As the tank heaters check the water level in each tank, the fresh and waste water tank heaters can operate independently, for instance use of frost protect feature while the fresh tank is full, but waste tank is empty, would only result in the operation of the fresh tank heater.

It is also possible to use the tank heaters en-route, i.e. while driving. With the control panel ON, turn on the tank heaters as described above. While the engine is running the control panel cannot be operated, however, the tank heater circuits will remain ON.

Please note that the heating elements use a 12V supply. With the engine off, and if used without a mains hook up and charger operating, then leisure battery power consumption will be increased (see 7.20 for more information).

7.8 Water level sensor & cleaning

Principle

The sensors fitted to Swift Group motorhomes are mounted on the water tanks, and link to the power supply unit, via a pre-fitted wiring harness. These can be in the format of rod, stud, or float switch types.

The rod type sensors consist of a number of stainless steel rods, at different positions, suspended from the top surface of the tank and immersed in the water contained within the tank. They use the conductivity of water, between the rods, to provide a reading to the control unit.

The stud type sensors are similar, except they are mounted in the side of the tank at differing heights. As with the rod type, the conductivity of water between the studs is used to provide a reading.

A final, float type, is also mounted in the side of the tank. These multiple switches are 'on' or 'of' depending on the level of water within the tank, relative to their height on the side of that tank.

The rod and stud sensors are 'digital', in that while the conductivity (resistance) value can vary, the power supply unit will register any conductivity between the rods or studs, indicating water present. Normally, even if the rods or studs are dirty, providing the they are not bridged by a foreign object, a circuit will still be delivered back to the control unit and a water level displayed.

Sensor cleaning

The first step, in case of fault diagnosis, is to clean the inside of the tank and/or sensors. False water level readings at the control unit can be caused by calcium build-up or foreign objects within the tank bridging the rods or studs, or, preventing the movement of float switch.

Your dealer will be able to assist in the purchase of cleaning solutions for the water tanks, those products being safe for use in drinking water supplies, and not containing chemicals which could damage the stainless steel components within the water system.

7.9 The External Shower Point





The external shower point will be supplied with a separate shower head and hose assembly.

To connect the shower hose, simply slide the lid on the housing up and remove the blank cap by pushing the blue Hozelock fitting forward and pulling the blank out. Screw the male Hozelock fitting (supplied) on to the end of the hose screw thread and then push into the female fitting inside the housing.

To remove, push the blue Hozelock fitting forward and pull the male fitting on the hose from the housing. Replace the blank cap.

7.10 Water fault finding

Fault	Cause	Remedy
Water not flowing from any tap when operated but pump runs	Freshwater tank empty	Check
	Pump wired in reverse	Check wiring, refer to pump manufacturers instructions
	Pipe inlet or outlet pipe disconnected	Check connections
	Pump pipes restricted by kinking	Check pipes run
	Blockage in pump inlet or outlet pipe	Check, starting inside freshwater tank
	Blocked pump filter	Dismantle and clean filter. See pump manufactures instructions.
	Air leak in suction line to pump	Check condition of pipe and pipe joints between the water tank and the pump.
Pump does not run	Pump incorrectly wired	Refer to pump manufacturers instructions
	Pump fuse blown	Check wiring connection and then replace with fuse of correct rating
	Battery disconnected	Check connections
	Pump seized or overheated	Refer to pump manufacturers servicing instructions
	Pressure pump sensing switch may have failed	Refer to pump manufacturers servicing instructions
	Contacts may be faulty	Check contacts in plug and socket are clean and making contact
	Wiring connections may be faulty	Check wiring connections
Water flows from cold tap but not from hot	Blockage in hot pipeline	Disconnect pipes and inspect
	Heater inlet or outlet pipes kinked preventing flow	Check and re-route if necessary.
	Hot tap failed or blocked	Disconnect and inspect
	Heater non-return valve jammed	Seek service attention

Fault	Cause	Remedy
Water flows from hot tap but has reduced flow from cold	Cold water pipe kinked preventing flow	Check and re-route if necessary
	Blockage in cold pipe line	Disconnect pipes after 1st connector and check up to tap
	Cold tap not connected	Refer to installation instructions
	Cold tap failed or blocked	Disconnect and inspect
Reduced flow from both hot and cold taps	Battery condition low causing pump to run slowly	Check battery state of charge, refer to electrical supply note
	If new taps have been fitted they may be restricting flow	Disconnect and check that they have at least 1/4" (6.3mm) bore
	Pump needs servicing	Refer to pump servicing instructions
	Partially blocked pump filter or in-line filter, if fitted	Dismantle and clean if necessary
	Pump outlet pipe kinked restricting flow	Check and re-route if necessary
	Water leak	Check all water connections
Reduced flow from either tap	Pipe kinking restricting flow	Check and re-route if necessary
	Bore size difference in taps	Use taps of equal bore size
If pump motor runs steadily and will not stop	Battery voltage may be too low (below 10.5 volts)	Check that there is water in the container Adjust switch and/or re-charge battery. Check all connections in pipework

Heater Flue Installation

All flue installations should be inspected once a year throughout their length for corrosion. Flues should be replaced if any sign of perforation is found. Ensure that the replacement is of an approved type.

⚠ **WARNING:** Where a flue terminates below the floor you must ensure it is kept clear and the area around it unobstructed (e.g. snow)

Thermal insulation heating

Your motorhome has been designed to achieve a thermal insulation and heating level for specific climatic conditions when tested according to the procedure in EN1646-1.

See the motorhome technical book for the classification of your motorhome. All Swift Group motorhomes achieve a Grade 3 classification.

The classifications are as follows:

Grade 1

A motorhome with an average thermal transmittance (u) that does not exceed 1.7W/m^2K.

Grade 2

A motorhome with an average thermal transmittance (u) that does not exceed 1.7W/m^2K and which can achieve an average temperature difference of at least 20°C between inside and outside temperatures when the outside temperature is 0°C.

Grade 3

A motorhome with an average thermal transmittance (u) that does not exceed 1.2W/m^2K and which can achieve an average temperature difference of at least 35°C between inside and outside temperatures when the outside temperature is -15°C.

7.17 The electrical system

General Information

It is strongly advised that the mains installation is inspected periodically to ensure safe use. The IET (BS7671) wiring regulations recommend that mains installations in motorhomes are re-inspected every 3 years or annually if the van is used frequently. The National Caravan Council lists the qualifications necessary to perform this inspection, but an NICEIC approved contractor is probably the first choice.

On arrival at the campsite

- Check the suitability of the supply, is it AC or DC, is the voltage and frequency correct.
- Ensure that there is a proper earth (3 pin socket outlet).
- If in doubt consult site staff.
- Make sure that the supply from the site is switched off.
- Make sure that the charger switch on the PSU is switched off.
- Slide up the cover from the bottom on the electricity inlet on the motorhome, and insert the connector on the flexible supply cable.
- At the site supply point, connect the other end of the supply cable to this using the socket provided.
- Switch on the main switch at the site supply point.

ⓘ **Note:** It is good practice to test the RCD (Residual Current Device) in the PSU before switching on. There is a test button on the RCD to test the lever, put the lever in the up position (on) before testing.

ⓘ **Note:** As with the RCD it is good practice to check the Miniture Circuit Breaker (MCB) in the PSU. Switch all to the on position (lever up). If any do not stay up then there is a fault.

On departure from the campsite

- Switch off supply from the site, disconnect the cable at both ends.
- Switch off RCD.

ⓘ **Note:** Never use a mains supply lead whilst coiled. Always uncoil the full length before connecting to the supply and remember to protect the cable from traffic.

⚠ **WARNING:** Current consumption in the motorhome must not exceed 16 amps or the pitch permitted maximum if this is less than 16 amps.

7.18 Overseas connection

- Connection to a mains voltage overseas requires particular attention.
- Overseas supplies can be of reverse polarity.
- Reverse polarity results in equipment not necessarily being isolated when turned off, reverse polarity indicator on the PSU will light in the event of reverse polarity.
- The only sure way to make equipment safe is to unplug it.
- It is useful to have a means of checking polarity when overseas.
- If it can be achieved then connect live to live, and neutral to neutral to achieve full electrical protection.

⚠ **WARNING:** Never allow modifications or repairs of electrical or LPG systems and appliances except by qualified persons.

7.19 230V mains electrical equipment power consumption

Please note:

It is possible that the 230v mains equipment may not all operate simultaneously. A typical UK campsite mains hook-up point may provide up to 10amps, though some 16amp hook-ups are now available. On some continental sites, the available output may be as low as 5amps. Please check the available mains output with your site operator.

If you electrical loading exceeds the site supply, it may trip the site circuit breaker, and the on-board inverter in your Carrera may then automatically provide 230v power, using the leisure battery as an energy source instead of the site supply.

In addition, the loadings on each circuit breaker within the motorhome should be observed. A label positioned close to the MCB's will identify which appliances within the motorhome are fed from which MCB. Consulting the table in this handbook (Typical Appliance Consumption Figures) in conjunction with the MCB allocation label, will give an indication of which appliances can, and cannot, be operated simultaneously, site supply allowing.

Wiring of connecting cable and motorhome mains inlet

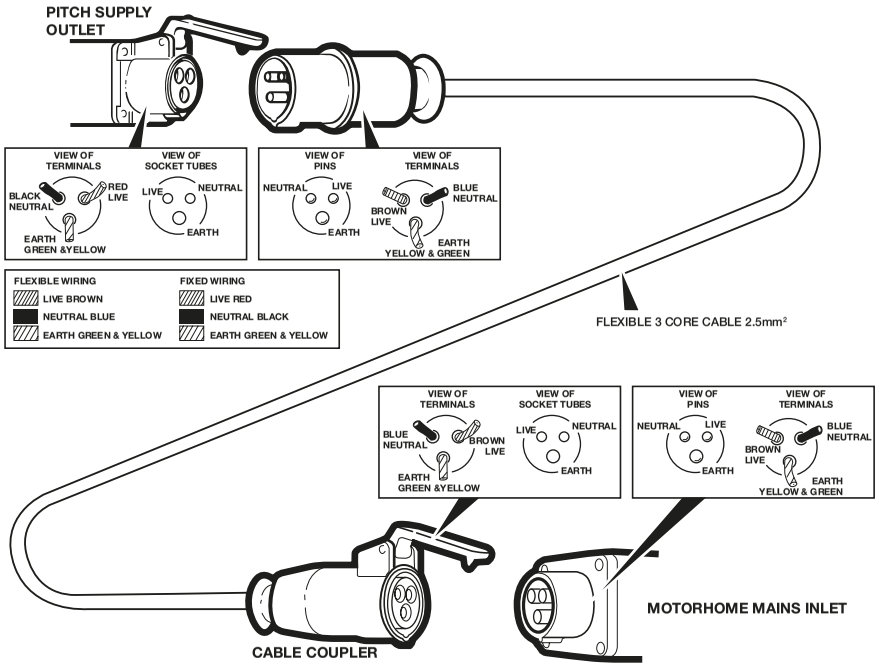

The legal length of the mains inlet cable is 25 ± 2 metres. When in use it must be fully uncoiled and protected from traffic.

7.21 Typical appliance consumption

	230 Volt		12 Volt	
Appliance/ Item	**Watts**	**Amperes**	**Watts**	**Amperes**
Dometic RC10.4T Refrigerator	Not applicable		Up to 42 W	Up to 3.5 amps
Dometic NRX80 Refrigerator	Not applicable		Up to 55w	Up to 4.6 amps
Truma Combi 6DE Combi Heater	900 W / 1800 W	3.9 / 7.8 amps	4.8 to 97 w	0.4 to 8.1 amps
Dometic Induction Hob	2300 W	10 amps	Not applicable	
Dometic Oven/Air-fryer/Microwave	1500 W	6.5 amps	Not applicable	
(3-in-1) Mains Battery Charger	780 W	3.5 amps	Not applicable	
12v LED lights (each, depending in size of light)	Not applicable		0.4w - 6.1w	0.05 amp – 0.5 amp
USB socket	Not applicable		Up to 18w	Up to 1.5 amps
Water tank frost element (When fitted)	Not applicable		30 W	2.5 amp each
Pressure switched water pump	Not Applicable		24w	2.0 amp

Note: These are approximate figures for guidance only, and are subject to changes in specification. The figures show energy consumption when an item or appliance is operating – i.e. a light is illuminated, or a heating system is providing space heating or water heating. Appliances which feature LCD or illuminated control panels can have a low current consumption when in stand by mode, or have a constant low current draw in the background to run their displays and electronic systems - these figures are typically 0.4 amps or less, for each applicable item. These electronic items can in most cases be switched off individually, or, use of the System Shutdown button on the power supply unit isolates the majority of the items: The high current consumers such as the 3-in-1 charger, inverter and Combi D have a direct connection to a fused output from the leisure battery.

8. Preparing for the road

8.1 Leisure battery 54

8.2 EC940 Power Control System 56

8.3 Using the System 56

8.4 Control Panel - Layout 58

8.5 System Warnings 67

8.6 System Technical Information 70

8.7 Common Fault Table 74

8.8 Technical Data & Approvals 76

8.1 Leisure battery

⚠ **WARNING:** Use caution when removing or replacing the leisure battery. Batteries can cause severe injuries and damage when handled incorrectly, please take into account that the weight of the installed battery may be in excess of 25kg. In addition, caution should always be taken when operating equipment containing high-capacity energy storage devices.

Your motorhome has been fitted with one 340Ah leisure battery, located in the rear seat / bed area.

⚠ **WARNING:** For your own safety, do not store anything other than the leisure battery in the battery storage area, which typically also contains a high current fusebox, battery charger and inverter.

The leisure battery installed uses LiFePO4 chemistry, and can be mounted in a vertical or horizontal orientation. Due to the construction of this battery, it is not necessary to vent the battery to the outside, and there is no requirement to check and maintain electrolyte levels. There are however some care points that should be taken into account to maximise the lifespan of your battery / batteries.

The latest information on the use of this battery, along with manual, certificates and user guides are available at:

https://support.roamer.com

The state of charge of your leisure battery/ batteries can be viewed on the control panel above the door of your motorhome. In addition, the Roamer SMART App can be downloaded to your iOS or Android smartphone or tablet. The App can be used to connect through Bluetooth to your battery / batteries, to provide a further way to monitor state of charge, individual cell voltages, current draw, and any fault codes. The default Bluetooth pairing password for your battery is 1234.

This can be changed once connected, but be careful to make a note of the new password. Guidance on use of the Roamer App, including changing passwords or settings, is provided in the Roamer battery manual.

Switching ON and OFF your Roamer battery



Each Roamer 340 battery features an ON/ OFF button on the top surface, between the positive and negative terminals. If the control panel shows that there is no battery present, please check if the battery is switched ON via this button:

When the battery is ON, the LED around the button will illuminate.

To turn the battery OFF, press and hold the button.

If for any reason the battery has to be disconnected, turn the battery OFF, and turn the charger and any electrical loads OFF, before disconnecting. Leave the battery switched OFF until connecting cables are re-connected and torqued to the correct settings (Typically 12Nm for M8 terminals and 16Nm for M10 terminals, see latest Roamer information for any changes to these values).

Remember, if tracking, alarm or other security features are fitted, to take these into consideration before switching the battery OFF – for instance, notify your tracking system call centre before switching off the battery.

Storage for extended periods

For maximum battery lifespan, prior to storage, turn all electrical items such as lights etc OFF, and using the control panel or App, check that the battery voltage is between 13.0v and 13.25v, an equivalent of 40% to 80% state of charge. If security features allow, press and hold the battery ON/OFF button to turn the battery OFF, to isolate the battery from any loads or charging, and then disconnect the negative cable from the negative terminal of the battery.

Leaving the battery connected to mains

charging or solar charging while in storage is not recommended, as storing the battery at 100% state of charge can reduce the lifespan of the battery. Instead, monitor the state of charge regularly, using the control panel or the App. Try to ensure the battery voltage does not drop below 12.8v, 'topping up' the battery back up to a voltage between 13.0v and 13.25v with mains powered charger or solar charging, as or when required.

Your Roamer battery will self-discharge at a rate of around 3% per month if left switched OFF, this increases to around 7% per month if switched ON, and the battery will discharge at a higher (faster) rate if the battery is ON, with any electrical loads connected. For more details of electrical loads, see consumption tables and further information in the electrical section of this handbook.

Storage at low temperatures should not adversely affect your battery, but please see information that follows on charging at low temperatures.

Further information on storing your motorhome is available elsewhere in this handbook.

Charging your LiFePO4 battery in colder conditions

The battery / batteries should not be charged at temperatures below 0deg C, the battery will prevent you doing this by locking charge when the internal temperature drops too low. As your battery is located within the motorhome, the motorhome's heating system can be used to increase the temperature within the motorhome, which will in turn increase the temperature of the battery. When heating the motorhome interior, allow suitable time (several hours) for the internal components of the battery to gradually warm though to at least +5deg C. Do not apply direct heat to the battery or battery casing.

What to do if your battery will not re-charge

The Battery Management System (BMS) may enter low voltage protection mode, and if this happens the voltage measured across the battery terminals will typically measure between 1v and 2v: This is normal when in low voltage protection mode, and unlike seeing a between 1v and 2v on a traditional lead-acid battery, this does not necessarily indicate that the battery is damaged beyond repair. Steps should however be taken, to charge the battery as soon as possible.

The on-board charger and solar regulator may not be able to detect the battery, when in low voltage protection mode, making it more difficult to re-charge. Using the emergency mode on the Roamer SMART App will temporarily remove the low voltage protection mode, allowing you to charge normally. If this is not possible, please contact your dealer, or Roamer, for assistance.

Battery State of Charge percentage

The Roamer SMART app and the control panel will both show an estimated state of charge remaining in the battery, provided as a percentage and as a time-to-go reading. This should stay accurate in normal use, but it can drift out of alignment, especially if the battery is new, or the battery has not been cycled (charged and discharged) for a while. Fully charging to 14.2V, or discharging to below 10.8V, will calibrate the state of charge accordingly. State of charge is a calculated value and is for information only – it does not have any effect on the operation of the battery, or battery protection modes.

8.2 EC940 Power Control System

This section of the handbook will guide you through the operation of the electrical system. All details are correct at the time of going to press.

For the safe operation of all electrical equipment within your Leisure Vehicle it is important that you read and fully understand these instructions. If you are unsure of any point, please contact your dealer / distributor for advice before use.

The The EC900 Power Control System has a number of key components that you will need to be familiar with before attempting to use the system, these are:

- The EC652PSU Power Control Unit (PSU) - a combined mains consumer unit and 12v controller located in the rear bed box area.
- The EC940 Control Panel (CP) - a remotely located user control panel used to turn circuits on and off and to display battery, water tank and other system information. This panel uses a graphical touchscreen with straightforward controls and reliable data communication to the PSU.
- The AXC40 3-in-1 battery charger - a combined mains charger, DC-DC charger and solar regulator which takes power from multiple sources, to provide rapid charging of the leisure battery.
- The IXC3000 Pure Sine Wave Inverter - an inverter which uses battery power to supply mains power whenever off-grid. Should the site supply suddenly switch off, the inverter can automatically switch to inverter power, ensuring continuity of supply.
-

8.3 Using the System

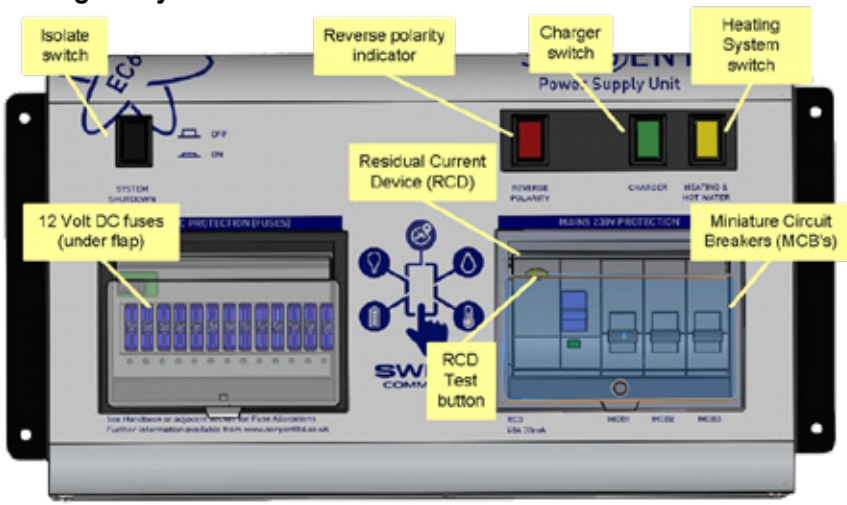

Activating the System

The system has a shutdown feature that can be used when the vehicle is in storage. This allows the leisure electronics to be turned off when not required to avoid flattening of the leisure and / or vehicle battery.

When in the off state only the alarm and tracking system supplies are still active.

Before using the system, please ensure the system shutdown switch is in the on position (button in) the system is now active.

Connecting to the Mains 230V supply and Safety checks

For your safety it is IMPORTANT that you follow these connections instructions each time your Leisure Vehicle is connected to a mains supply. This section assumes that the system is complete and that a Leisure battery has been installed.

A) Ensure suitability of the Mains Supply.

Your Leisure Vehicle should only be connected to an approved supply that meets the requirements of BS7671 or relevant harmonised standards. In most cases the site warden will hold information regarding suitability of supply. If using a generator, you also need to comply with the requirements / instructions supplied with the generator. Please note that some electronic generators may not be compatible with your leisure system.

B) Switch the PSU Battery Charger / Power Converter OFF.

Locate the green 'Charger' power switch on the PSU and ensure the switch is in the off position (button out) before connection to the mains supply.

C) Connect the Hook-up Lead.

Firstly, connect the supplied hook-up lead (orange cable with blue connectors) to the Leisure Vehicle and then connect to the mains supply.

D) Check Residual Current Device operation.

Locate the RCD within the PSU and ensure the RCD is switched on (lever in up position). Press the 'Test' button and confirm that the RCD turns off (lever in down position). Switch the RCD back to the on position (lever in up position).

E) Check Miniature Circuit Breakers.

Locate the MCB's within the PSU (adjacent to the RCD) and ensure they are all in the on (up) position.

F) Turn the PSU ON.

Locate the black 'Shutdown' button and ensure it is in the on position (press button in). Locate the green 'Charger' switch on the PSU and turn to the on position (press button in). The charger switch will illuminate when turned on.

G) Check correct Polarity.

Locate the 'Reverse polarity' indicator on the PSU and ensure that the indicator is NOT illuminated.

H) Check operation of equipment.

It is now safe to operate the 12V and 230V equipment.

Operation while driving

The power control system is designed to shutdown parts of the system while the engine is running. This is to meet Electro Magnetic Compatibility (EMC) regulations and to ensure the safe operation of the motorhome. With the engine running the screen will show a warning 'ENGINE RUNNING'.

Please ensure the system shutdown switch on the PSU is in the on (button in) position before driving. This will ensure the electronic system is active and will therefore be able to control the charging process, supply the refrigerator and monitor other system circuits.

If / when fitted, designated 12V sockets, enroute reading lights and enroute heating will remain operational while the engine is running.

8.4 Control Panel - Layout

Your control panel will have an appearance as below, but depending on your vehicle specification the control panel features will vary. Not all features are present in all vehicles.

EC940 Control Panel

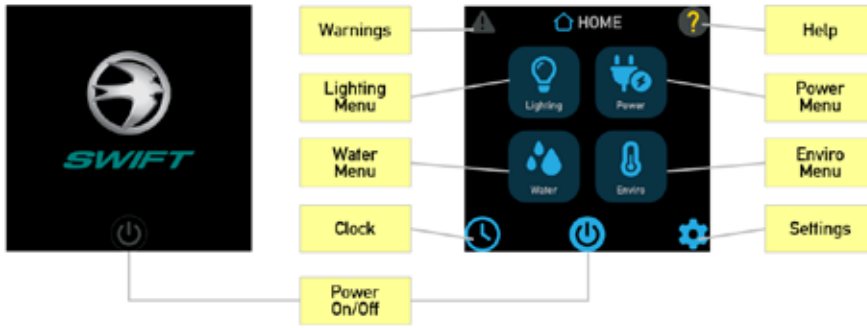

	**Power On/Off Button** - After activating the PSU by pressing the System Shutdown Button the display will beep twice and show the Swift start-up logo. To activate power to all circuits, press the power on/off button, the panel will beep once. To turn the power off and enter standby mode, press the power button again. Note:- If the display has been inactive for some time, the backlight will be switched off to save power. Simply tap the screen to restore normal brightness.
	**Lighting Menu** - Press the lighting button to show the lighting control screen. Here you can turn on / off or adjust the dimmable lighting levels.
	**Power Menu** - Press the power button to show the power information and control screen. Here you can view leisure/vehicle battery condition, view the 3-IN-1 charger & inverter screen, and control related features.
	**Water Menu** - Press the water button to show the water tank information and control screen. Here you can view tank levels and control related features.



Pump Button - Press the pump button to turn the water pump on. Press the button again to turn the pump off. The button border will illuminate when the pump is on.



Environmental Menu - Press the enviro button to show the internal and external temperature in degrees Celsius. Also shown is the internal relative humidity.



Warnings Button - The system incorporates a number of warnings, for example if the battery becomes low. When a warning is active a warning box will appear along with an audible beeping sound. Until the warning has been fully cleared, the warning indicator will remain Red. Press the indicator to view any active warnings.



Help Button - Press the help button to display the context sensitive help screens. These will provide more detail about how to use the currently selected screen.



Clock Button - Press the clock button to display the current time in 24hr format. This screen also provides status tiles for the leisure battery, fresh water tank, 230V mains and solar panel charging, where fitted.



Settings Button - Press the settings button to show the general settings screen. Here you can set the date & time, screen brightness and screen on-time, key beeps etc. There are also buttons on this screen to pair or delete Bluetooth devices. Press the home button to return to the main screen.



Advance button - Pressing this button will advance to the next main section, for example to move between Lighting, Power, Water and Enviro screens



Next Button - Pressing this button moves to the next screen within a section, for example to move between Leisure and Vehicle battery screens



Home Button - Pressing this button will go back to the Main Menu screen



DC-DC Charging Menu - Available when the engine is running, press the DC-DC button to show the battery-to-battery charging information.

Clock / Status Screen

Clock screen - This screen not only displays the current time and date but also provides status tiles for the main services in the vehicle such as leisure battery and fresh water tank.

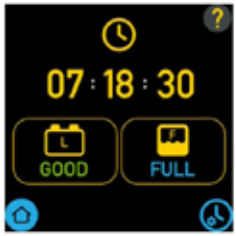

GOOD	**Leisure Battery** – The charge status is shown GOOD – No charge required FAIR – Charge recommended POOR – Charge immediately CHARGING – Charger is switched on DISCONNECTED – No battery detected
FULL	**Fresh Water (if fitted) -** The water tank level is shown FULL – 100% GOOD – 50% to 99% LOW – 25% to 49% EMPTY – less than 25%
	Clock Setup – Press this button to access the clock setup screen

Clock setup – Use this screen to set the current time and date

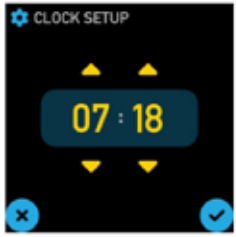

	Set Time – Use the up / down arrows to set the required time
	Confirm settings – Use the tick to confirm the settings or cross to cancel the settings

ⓘ **Note:** the clock has a power backup, which can retain the clock settings for a number of weeks. If the vehicle has been stored for longer than this with no 12 volt power, the clock may need to be reset.

Environmental Readings

The EC940 system uses two sensors to measure internal temperature/humidity and external temperature. The combined internal temperature and humidity sensor is furniture mounted within the motorhome, and the external sensor is mounted below the motorhome floor. The figures displayed are for information only, and it is hoped the information will be useful.



	Internal – The internal temperature and humidity is shown along with a bar graph
	External – The external temperature is shown along with a bar graph

Water System Operation

The EC940 control panel pump button operates the internal water pump drawing water from an on-board tank.

The water tanks (fresh & waste) incorporate a level warning feature to warn the user when the fresh water level drops below 25% or when the waste water level reaches 100%. These warnings can be enabled / disabled from the User Settings screen.

If the water pump power is turned on and the fresh water level drops to below 25% a warning beep will be heard and a message will be displayed on the control panel.

To cancel the warning, press the the mute button on the warning screen.

If the water pump power is turned on and the waste water level rises to full (100%) a warning beep will be heard and a message will be displayed on the control panel. To cancel the warning, press the mute button on the warning screen..

These warnings will not be repeated unless the water pump power switch is turned off and on again. This is to ensure the warning does not become a nuisance.

Fresh Water Tank screen - Here you can view the on-board fresh water tank level and control water tank related features.



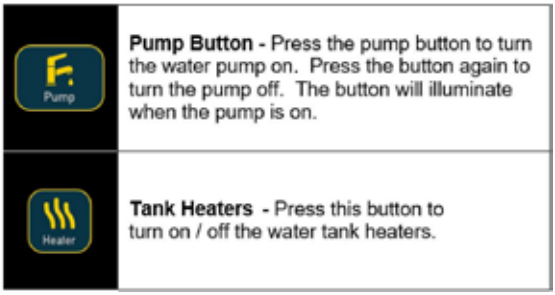

Pump Button - Press the pump button to turn the water pump on. Press the button again to turn the pump off. The button will illuminate when the pump is on.

Tank Heaters - Press this button to turn on / off the water tank heaters.

Waste Water Tank screen - Here you can view the on-board waste water tank level and control water tank related features.

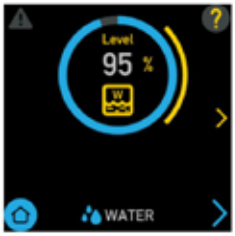

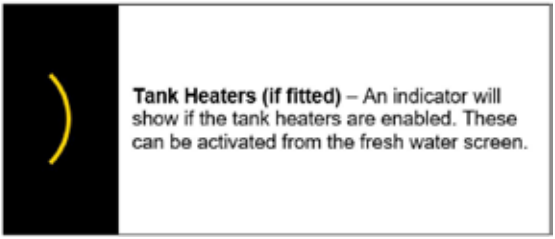

Tank Heaters (if fitted) – An indicator will show if the tank heaters are enabled. These can be activated from the fresh water screen.

Lighting & Dimming Operation

The system contains one dimming channel for groups of lights which can be dimmed, turned on and turned off by this screen and can also be turned on and off by furniture mounted switches.

The entry light can be controlled from the local switch adjacent to the entry door (if fitted) or the control panel entry light button. Each item can toggle the light on or off.

The awning light can be controlled from a number of sources, the control panel awning light button or the lock and unlock system (dependant on system setting being set to do so). Each item can toggle the light on or off.

Lighting screen - Here you can turn on / off or adjust the dimmable lighting levels.



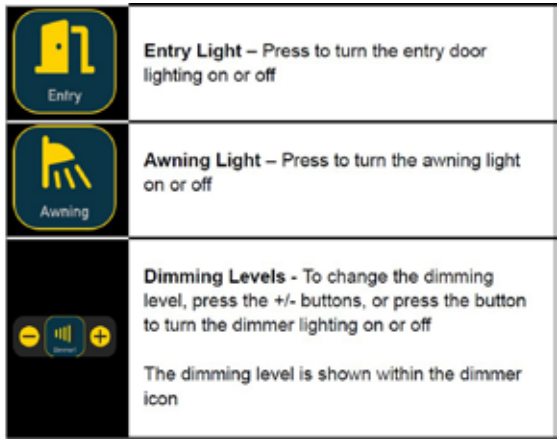

Power Management

The status of the leisure and vehicle batteries can be viewed on the control panel display by selecting the Power menu. Pressing the 'Next' button switch between leisure battery, vehicle battery and the charger/inverter screens.

Lithium+ Leisure Battery screen (12V) - Here you can view the detailed information provided by the smart leisure battery, such as state of charge, time remaining, charge/discharge cycles and usable capacity.



GOOD FAIR POOR CHARGING DISCONNECTED	**Battery Status -** Shows the current battery status described as below GOOD – No charge required FAIR – Charge recommended POOR – Charge immediately CHARGING – Charger is switched on DISCONNECTED – No battery detected
76% 13.4V	**Battery Charge -** This tile shows the State of Charge % of the battery, and the voltage in Volts 50-100% – No charge required 25-49% – Charge recommended 0-24% – Charge immediately
Current 8.4A	**Current Flow -** This tile shows the current flow in or out of the leisure battery in Amps
2:51	**Time Remaining –** This tile will display the predicted time remaining before the battery is fully discharged or fully charged (as shown by the direction arrow and text) The number under the battery indicates the CAN Bus connected battery/batteries set up
127 Cycles	**Cycles –** This tile shows how many charge / discharge cycles the battery has completed
100 Capacity Ah	**Battery Capacity –** This tile shows the remaining capacity of the battery in Ampere Hours For a new battery the fully charged capacity will be the rating on the battery label e.g.,100Ah, this will gradually reduce as the battery ages

The status of the leisure and vehicle batteries can be viewed on the control panel display by selecting the Power menu. Pressing the 'Next' button switch between leisure battery, vehicle battery and the charger/inverter screens.

Vehicle Battery screen - Here you can view the vehicle battery status, and some controls to manually select the vehicle battery to be used to power the 12V circuits, or for the vehicle battery to be boost-charged by the system.



GOOD FAIR POOR CHARGING DISCONNECTED	**Battery Status -** Shows the current vehicle battery status described as below GOOD – No charge required FAIR – Charge recommended POOR – Charge immediately CHARGING – Charger is switched on DISCONNECTED – No battery detected
Voltage 13.2V	**Battery Charge -** This tile shows the vehicle battery voltage in Volts
Current 3.4A	**Current Flow -** This tile shows the current flow in or out of the leisure battery in Amps
Using Vehicle	**Use Vehicle Button -** Press this button to select the vehicle battery as the power source for the 12V circuits
Boosting Vehicle	**Boost Vehicle Button -** Press this button to manually boost charge (approx. 15 Amps) the vehicle battery from the leisure battery for 1 hour Note: If Boost Vehicle is off, the leisure battery is well charged and a low charge is detected on the vehicle battery, then the leisure battery will automatically provide up to 5 Amps of trickle charging into the vehicle battery

3-1N-1 Charger/Inverter screen - Here you can see the integrated 3-IN-I battery charger information and inverter power control.

The 3-IN-I charger provides charge into the leisure battery from one of three possible sources:-

• Mains (AC-DC) - When a mains hookup lead is connected

• Vehicle (DC-DC) - When the vehicle's engine is running

• Solar - When solar panels are harvesting solar energy

When not on mains hook-up, the inverter when turned on via its button on this screen will supply 230V mains power to equipment such as 230V sockets and heating by converting power from the 12V leisure battery.

If on mains hook-up, the inverter will set into a Bypass mode and will not operate. In this mode a line will indicate mains power is passing through the inverter and the power consumed by the inverter will display as zero.

If mains hook-up is then removed, the inverter will set back into its Inverter mode and can be turned on by the Inverter button on this screen.





Charging Sources - Indicates which sources are available to charge the leisure battery

Mains (AC-DC) - When a mains hookup lead is connected
Vehicle (DC-DC) - When the vehicle's engine is running
Solar - When solar panels are harvesting solar energy



Charge Current - This tile shows the total current the battery is charging at (ie the charging sources' current, minus the DC loads current)



Battery Load/Boost Indicators - This tile shows the leisure and vehicle batteries, and will indicate if Vehicle Boost is enabled (see Vehicle Battery screen)

The yellow arrows will point towards the Loads tile indicating whether the leisure battery is supplying the inverter and/or the 12V circuits, or the vehicle battery is supplying the 12V circuits



	when the Use Vehicle Button is on (see Vehicle Battery screen)
0W 2.7 A	**Loads -** This tile shows the power supplied by the inverter (when off-grid) in Watts, and the 12V circuit load on the selected battery
ON STANDBY OFF	**Inverter Button -** Press to turn the inverter on or off The button will show Standby when mains power is present and the inverter is turned on, and will change to On when mains power is removed
BYPASS AC LOADS	**Bypass indicator -** Shows when the vehicle is on mains hook-up and the inverter is acting as a pass-through (ie. not powering the 230V circuits itself) and the inverter load shown in the Loads tile will be zero

DC-DC Charging

When the engine is running, the control panel will display a button to view the DC-DC charger information and battery information on the 'Engine Running' screen shown below.

Press the button to access the 3-IN-I Charger/ Inverter screen.

The vehicle battery icon will illuminate to show the leisure battery is being charged from the vehicle battery and alternator.

Electric Step Operation

On vehicles fitted with an electric step, this is operated by a button near the entry door. Press and release the button to move the step in or out. One press of the button will move the step out; a further press will move the step in again.

If the engine is started the step will move in automatically, after a short warning buzzer. If this operation fails due to an obstacle a buzzer will sound continuously to warn that the step is still out, and therefore requires your attention.

8.5 System Warnings





	Warning Heading – Shows related heading the warning(s) fall under. If an error code is provided (by an appliance) it will be shown next to the heading
	Warning Details – Shows warning(s) and assisting information if provided
	Mute Button – To mute the warning sound, press the Mute button under the warnings list. The icon will then become Grey and the sounder will stop The warning will remain until it is fully cleared, for example by re-filling the water tank or re-charging the battery
	Safety Icon – Some warnings cannot be muted and will remain until fully cleared, for example by removing hook-up lead when engine on
	Next warning – Shows next warning screen if multiple warnings are active

Power Control System Warnings

Heading	Warning	When	Type
FRESH WATER	Fresh Tank Below 25%	With pump turned on and fresh water level low (less than 25% full)	
WASTE WATER	Waste Tank Full	With pump turned on and waste water level full	
LEISURE BATTERY	Battery Voltage Low	With control panel power on and leisure battery selected (as active battery), charge level below 15%	
LEISURE BATTERY	Battery Voltage Very Low	With control panel power on and leisure battery selected (as active battery), charge level below 5%*	
LEISURE BATTERY	Battery Voltage Too High	Leisure battery is selected (as active battery), voltage level above 15V	MUTE
VEHICLE BATTERY	Battery Voltage Low	With control panel power on and vehicle battery selected (as active battery) and the voltage level is below 11.3V	
VEHICLE BATTERY	Battery Voltage Very Low	With control panel power on and vehicle battery selected (as active battery) and the voltage level is below 10.9V*	
VEHICLE BATTERY	Battery Voltage Too High	Vehicle battery is selected (as active battery), voltage level above >15V	
CAN BUS	No CAN Bus Detected Check PSU & Control Panel Wiring	No CAN bus is detected at control panel CAN bus lead from PSU to control panel should be inspected for disconnection or faults	
CAN BUS	No CAN Bus Detected Leisure Battery Critical	With control panel power on and leisure battery selected (as active battery) and the voltage level is below 9V, and no CAN bus detected at control panel System will shut down after 30 seconds to protect battery	
CAN BUS	No CAN Bus Detected Vehicle Battery Critical	With control panel power on and vehicle battery selected (as active battery) and the voltage level is below 10V, and no CAN bus detected at control panel System will shut down after 30 seconds to protect battery	
MAINS SUPPLY	Mains Lead Connected	When the engine is started and the mains cable is still plugged in and the charger is switched on	
INVERTER	Inverter Switched On	When engine is running and inverter is still on	
ENTRY STEP	Engine Running Step Is Extended	Step extended and engine started Step jammed or obstructed	

User Settings

The EC940 control panel has a number of user settings, which can be accessed by pressing the User Settings button. This screen also displays the software version number of the PSU, Control Panel and the communicator / tracking unit details, if a Sargent Communication Unit is fitted.

User Settings screen - Here you can set the key beeps, screen brightness, screen on time etc.

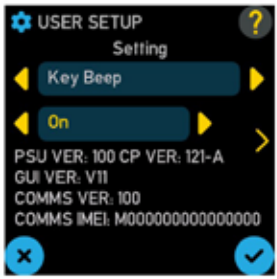

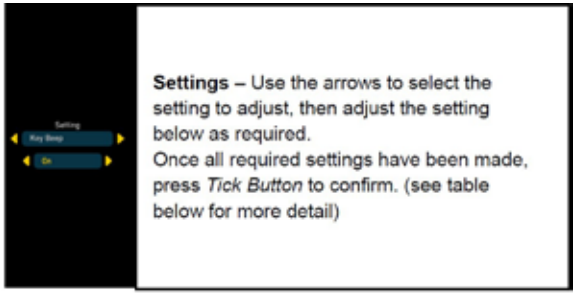

Section	Possible Settings	Description
Key Beep	On / Off	Turn the key beep sound on or off
LCD Brightness	10% to 100%	Adjust screen brightness
Backlight Time	30 seconds to 90 minutes + Always On	Adjust time before screen backlight goes off
Water Alarms	On / Off	Turn the water alarms beep sound on or off
Lighting Mode	None / Lights / Lights & Dimmer	Sets lighting behaviour when control panel is switched on, None – Not used Lights – Normal lights come on. Dimmable lights are off. Lights & Dimmer – Normal lights come on. Dimmable lights come on at the last used dim level setting

8.6 System Technical Information

The following section provides further technical information relating to the electrical system.

Residual Current Device & Miniature Circuit Breakers

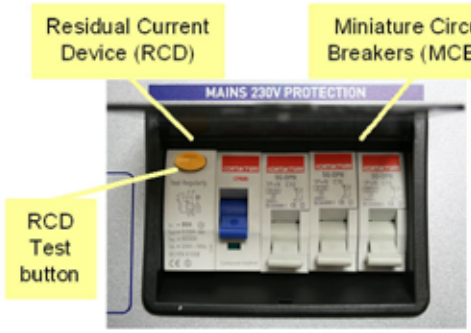

The Residual Current Device (RCD) is basically provided to protect the user from lethal electric shock. The RCD will turn off (trip) if the current flowing in the live conductor does not fully return down the neutral conductor, i.e., some current is passing through a person down to earth or through a faulty appliance.

To ensure the RCD is working correctly, the test button should be operated each time the vehicle is connected to the mains supply.

The Miniature Circuit Breakers (MCB's) operate in a similar way to traditional fuses and are provided to protect the wiring installation from overload or short circuit. If an overload occurs the MCB will switch off the supply. If this occurs you should investigate the cause of the fault before switching the MCB back on.

The following table shows the rating and circuit allocation for the three MCB's

MCB	Rating	Description
1	13 Amps	Induction Hob
2	16 Amps	Oven / Air Fryer / Heating System
3	10 Amps	Charger / 230V Sockets

Generator Usage

Caution should be used before connecting a generator to your motorhome.

⚠ **WARNING:** Never start or stop the generator while electrical loads are connected and switched on. Start the engine, let it stabilise and then connect the electrical load. When stopping the generator, disconnect the electrical load and let engine stabilise before switching off.

Whilst some generators use electronic inverter technology, others use a more basic principle to generate the 230V supply. Preference should be to choose a generator which produces a consistent sinusoidal wave form with accurate voltage control.

The Reverse Polarity warning light on the PSU may illuminate when using a Generator. This is a normal side effect when using some types of generator. Instead of connecting the neutral conductor to earth, some generators centre-tap the earth connection making both neutral and live conductors 110V above earth. This 110V difference causes the neon polarity indicator to illuminate.

In most cases it is safe to use a generator, but please consult the generator handbook for further information.

Leisure Battery

Type / Selection

The Carrera electrical system is designed around a Roamer 340Ah LiFePO4 (Lithium) battery, featuring a BMS that has software compatible with the Sargent control system.

Use of other types of LiFePO4 batteries that cannot communicate with the Sargent control system, could result in a loss of information at the control panel over the entrance door. Other types of LiFePO4 battery may also be of a different physical size, or be unsuitable for the installation position and orientation used in your motorhome.

Please note the fitted leisure battery data cable (CANBUS cable) must be connected, for battery readings to be displayed on the control panel.

Installation and removal, or disconnection/ reconnection of, the leisure battery

Disconnect the 230v mains supply and turn off the System Shutdown button (out/off) before disconnecting the positive and negative connections, or CANBUS connection, to the battery. Turn off the battery and disconnect the negative terminal, before disconnecting the positive terminal. Do not short circuit the positive and negative terminals.

If a tracking solution is fitted with an active subscription, it is advised to inform the tracking call centre, before removing the battery, to prevent an unnecessary security call.

When re-connecting a battery ensure positive / negative polarity is correct, and that the terminals are securely fastened with a torque setting to suit the terminal size – at the time of writing 12Nm for M8 terminals and 16Nm for M10 terminals, see Roamer documentation for confirmation.

Connect the positive and CANBUS cables, before connecting the negative terminal.

Operation / servicing

There are no user-serviceable parts in the fitted battery.

Take care to avoid over-discharging a battery, One of the most common causes of battery failure is when the battery is discharged below the recommended levels

To prevent over discharge, both the Power Control System and the leisure battery's battery management system incorporate a battery protect function that warns the users and then isolates the batteries when they fall below set values.

If a warning is active a beep will be emitted by the control panel and information will be shown on the screen. To mute the warning, press the mute button. These warnings will not be repeated unless the power switch is turned off and on again. This is to ensure the warning does not become a nuisance.

Battery	Voltage cut off	Action after cut off	Notes
Vehicle	10.9V	Battery selection is changed from Vehicle battery to Leisure battery. If the leisure battery is below 11V (5%) then a further warning will occur (see below).	This cut off level is designed to protect the vehicle battery from over discharge. The 10.9V level ensures there is sufficient power in the battery to run the vehicle electronics and start the vehicle. This cut off only applies to power drawn from the battery by the leisure equipment; it will not protect the battery if you leave vehicle circuits switched on, such as the road lights.
Leisure	11V (5%)	Power is turned off	This is an emergency cut off level to protect the battery from severe damage. You should not rely on this cut off level during normal operation, but manage your power consumption to a discharge level of about 12V (15%). This cut off only applies to power drawn from the battery by the leisure equipment that is controlled by the control panel power switch; it will not protect the battery from discharge by permanently connected equipment.

12 Volt DC Fuses

⚠ **WARNING:** When replacing fuses always replace a fuse with the correct value. NEVER replace with a higher value / rating as this could damage the wiring harness. If a replacement fuse 'blows' do not keep replacing the fuse as you could damage the wiring harness. Please investigate the fault and contact your dealer.

ⓘ **Note:** Fuses (2-13) have a Red LED below them which provides indication that the fuse has blown. Fuse 1 has a green LED which indicates that the system is powered up.

Fuse	Rating	Fuse Colour	Description
1	25 Amps	White	Not used
2	7.5 Amps	Brown	Permanent 12V / Alarm / Fridge Electronics
3	10 Amps	Red	12V Sockets / TV Amplifier
4	10 Amps	Red	Extractor Fans
5	5 Amps	Tan	Appliances / Hob Ignition / Toilet / Whale Water Heater
6	10 Amps	Red	Water Pumps / Tank Heaters
7	10 Amps	Red	Lighting, Main Lights & Dim Channel 1
8	10 Amps	Red	Lighting, Entry Light & Dim Channel 2
9	10 Amps	Red	Alde Heating, Truma Heating, Whale Air Heater, Marker Lights, En-Route Sockets & Lights
10	10 Amps	Red	Auxiliary / Awning Light / Electric Step
11	10 Amps or 15 Amps or	Red Blue	Compressor fridge RC10.4T Compressor fridge NRX50
12	15 Amps	Blue	Towing 12V
13	15 Amps or 20 Amps	Blue Yellow	Under counter Fridge D+ Fridge freezer D+

The following table shows details of the Megaval/Midival fuses located in the high current fusebox.

Fuse	Rating	Fuse Colour	Description
1	400 Amps	Purple	Battery / Inverter
2	80 Amps	White	Charger
3	40 Amps	Brown	PSU - EC652
4	30 Amps	Black	Spare
5	20 Amps	Tan	Heating Appliance

8.7 Common Fault Table

Fault	Possible Cause	Proposed Fix
No 230-volt output from PSU	Connecting lead between the site and Leisure Vehicle not connected	Check and connect lead as per (Connecting to the mains 230v supply and safety checks C)
	RCD switched off	Reset RCD as per (Connecting to the mains 230v supply and safety checks D)
	RCD not operating correctly	Check supply polarity; if the RCD continues to fail contact your Dealer as there is probably an equipment or wiring fault.
	MCB switched off	Reset MCB by switching OFF (down position) then back ON (up position), if the MCB continues to fail contact your Dealer as there is probably an equipment or wiring fault.
	No or deficient supply from site	Contact site Warden for assistance.
	Another fault	Contact your Dealer.
Reverse Polarity light is illuminated on PSU	Mains Supply reversed?	The reverse polarity light is designed to illuminate when the Live and Neutral supply has been reversed / crossed over. If the light illuminates there is a problem with the site supply or the cable connecting the supply to your vehicle. The light is designed to work on UK electrical supplies (where the neutral conductor is connected to earth at the sub station). If you are using your vehicle outside the UK this light may illuminate when no fault exists. In these cases, consult the site warden for advice.
	Generator being used	'The Reverse Polarity warning light is on when using my Generator'. This is a normal side effect when using some types of generator. Instead of connecting the neutral conductor to earth, some generators centre-tap the earth connection making both neutral and live conductors 110V above earth. This 110V difference causes the neon polarity indicator to illuminate. In most cases it is still safe to use the generator, but please consult the generator handbook for further information.

Fault	Possible Cause	Proposed Fix
Control Panel Problems	Control Panel has no display	Check batteries and fuses, turn PSU isolate switch and charger switch on and ensure mains supply is connected. Check control panel connecting lead at PSU and behind Control Panel. Contact your Dealer.
	12V Power turns off	Battery protect feature has operated to protect the Vehicle battery and or the Leisure battery. See (Leisure battery C) Over voltage protection has been activated, the control panel will display a warning. A number of things can cause this but the most common is the solar panel, it is worth checking the regulator is connected correctly and operating within the correct parameters. Engine has been started; all equipment has been disconnected to meet EMC requirements. See (Operation while driving)
	Control Panel locked / erratic function	Observe control panel handling instructions. Control panel software may have crashed. Reboot control panel by turning off the PSU isolate switch. Wait 30 seconds then turn the switch back on. Check with your dealer that your system has the latest software installed, as an update may be available.
No 12-volt output from PSU	No 230V supply	Check all above.
	Charger not switched on	Turn charger switch on, switch will illuminate.
	Battery not connected and / or charged	Install charged battery.
	Power button on control panel not switched to on	Turn power on at control panel.
	Battery flat / Battery fuse blown	Recharge battery, check fuses, check charging voltage is present at battery.
	Fuse blown	Check all fuses are intact and the correct value fuse is installed as per fuse table.
	Equipment switched off / unplugged	Check equipment is switched on and connected to the 12V supply.
	Another fault	Contact your Dealer.
	Inverter MCB is turned off	Reset inverter MCB by switching OFF (down position) then back ON (up position), if the MCB continues to fail contact your Dealer.
Pump not working	Fuse blown	Replace fuse with correct value as per fuse table.
	Pump turned off	Turn pump on by pressing the pump button at the control panel.
Lights not working	Fuse/s blown	Replace fuse with correct value as per fuse table.
	Lights turned off	Turn Lights on by pressing the lights button, use dimmer at the control panel.

Technical Support

If you require technical support on any Sargent products covered in this manual, please visit the Sargent Customer Support portal at sargent.zohodesk.eu.

In the Knowledge Base you can view product documentation and search frequently asked questions and in the Ticket section you can raise a ticket to request help from the support team.

Updates

From time to time there may be updates to the system firmware; these updates will be done at service intervals by your dealership.

8.8 Technical Data & Approvals

Equipment – EC652PSU, EC940, AXC40 & IXC3000

Outline Specification		
INPUT 230V	230 Volts / 0 to 16 Amps	+ / - 10%
OUTPUT 230V	RCD protected, 1 x MCB outputs of IOA, 1 x MCB output of 13A & 1 x MCB output of 16A (on EC652PSU), 1 x MCB output of 16A (on IXC3000) Separate switched channels for heating system and charger	
INPUT 12V	2 x 40A battery inputs via 2 x 4-way connectors	
OUTPUT 12V	25A total output via multiple switched channels protected by 13 fused outputs	
CHARGER IN / OUT	AC Input 110-230 Volts +/- 10%, Frequency 50-60 Hz +/- 6%, Current 3A max DC Input 10.5-16.5 Volts (DC-DC mode), 15-50 Volts (Solar mode) DC Output 12 Volts nominal, Current 40 Amps max (520 Watts) (AC-DC mode), Current 60 Amps max (780 Watts) (DC-DC mode), Current 30 Amps max (430 Watts) (Solar mode)	
Signal INPUT	4 x Fresh water level, 4 x Waste water level, 1 x Engine running, plus multiple vehicle connections, sensor inputs for temperature & humidity	Fresh water negative sensed Waste water negative sensed

Outline Specification		
Data IN / OUT	CAN Bus data communication and power to Control Panel via 6-way connector CAN Bus data communication to Roamer 105 or LBI OOS lithium battery via 2-way connector CAN Bus data communication to AXC40 3-IN-1 charger via 4-way connector CAN Bus data communication to IXC3000 inverter via 4-way connector	
IP rating	IP31	
Operating temperature	Ambient 0 to 35° Celsius Charger case temperature with full load 65°C Max	Automatic shutdown and restart if overheated / overloaded

Dimensions		
EC652PSIJ Power Supply Unit	Overall size (HxWxD) 180 x 305 x 135mm Clearances 75mm above, 50mm left & right	Weight 3.8 Kg
EC940 Control Panel	Overall size (HxWxD) 94 x 94 x 26mm Cut-out size (HxW) 86 x 86mm	Fixing via hidden spring clips Weight 135g
AXC40 3-IN-1 Charger	Overall size (HxWxD) 74 x 234 x 285mm	Weight 2.3 Kg
IXC3000 Pure Sine Wave Inverter	Overall size (HxWxD) 82 x 197 x 366mm	Weight 4.8 Kg
EC850 Sensor	Overall size (HxWxD) 20 x 35 x 38mm	Weight 10g
EC845 External Temp Sensor	Overall size (HxWxD) 25 x 5 x 5mm	Weight 3g

9. Fitted equipment

9.1 Truma Combi 6DE 81

9.2 Dometic Compressor Fridge 83

9.3 Dometic Airfryer Microwave Oven 84

9.4 Dometic CVI1525 Induction Hob 92

9.5 Thetford toilet 96

9.6 Windows 96

9.7 Cab Seat Swivel 98

9.8 Omnistep slide-out step 98

9.9 Thule 6300 Awning 98

9.10 Status 570 Digital antenna system 100

9.11 Care of laminate tops, tables, furniture and doors 101

9.12 Furniture doors 101

9.13 Table storage 101

9.14 Shower 101

9.15 Colour reference 101

9.16 Sliding Door and Rear Door Flyscreens 101

ⓘ **Note:** The instructions covering fitted equipment to your motorhome were correct at the time of going to print, and where possible, hyperlinks and QR codes have been used, which provide links to online versions of user instructions. Owners handbooks are updated annually and we take great care to try and ensure their accuracy. However, the Swift Group Limited cannot accept responsibility for any changes that may be made in specification or operating instructions to the equipment described in this section after the time of going to press.

Every care is taken to ensure that the information provided in this handbook is correct and easy to understand.

Separate manufacturers' leaflets on many of the components are also included in the Owner's Pack provided with this motorhome and we recommend that you compare the instructions provided via the handbook with the component manufacturers literature, to ensure the information provided is as accurate as possible.

If you are in any doubt as to how to operate the equipment in your motorhome, please contact the component manufacturer's service department on the telephone number shown on their component leaflet. If you remain in any doubt, please contact your supplying dealer.

ⓘ **Note:** In the interest of safety, replacement parts for an appliance shall conform to the appliance manufacturer's specifications and should be fitted by them or their authorised agents.

Equipment Specification

For details on type of equipment fitted in your vehicle, please refer to the Sales Brochure or Dealer.

⚠ **WARNING:** To maximise the use and life of all fitted equipment in your vehicle it is essential that any accompanying manufacturers' literature is read fully. All recommended maintenance and preparation procedures should be followed. The information provided in this handbook is only intended as a guide. If in any doubt consult your manufacturer appointed dealer, particularly before attempting to install EXTRA EQUIPMENT.

9.1 Truma Combi 6DE

The Combi 6DE uses a single appliance for both water heating and room heating. Room heating is via a fan assisted or blown-air distribution system.

The majority of blown air outlets used with this distribution system, are of the butterfly type. These may be opened or closed by moving the flap within the fitting, to adjust the balance of the heating output throughout the motorhome. This can help offset differences in blown air output, between outlets close to the heating appliance, and those greater distance away from the heating appliance. This can also help adjust the temperature of the bathroom, relative to the temperature of the main living area and/or bedroom. The blown air fittings can also be rotated to adjust the direction of air leaving the outlet, as shown in the photo below.

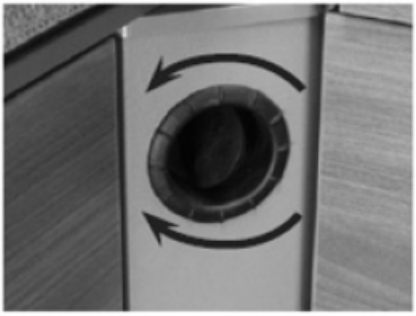

When these butterflies are closed in conjunction with a high heating system output, and therefore a high fan speed, a slight whistling sound can occur. In this case, opening the outlet slightly will reduce or remove the noise.

Closing too many outlets when the heating system is producing a high output, can cause the appliance to reach high operating temperatures. This does not in general terms effect the appliance, but can cause the appliance to automatically shut down. This can cause an interruption of the heating of the motorhome, however heating will resume when the appliance temperatures have reduced to a lower level.

The output of the appliance, and therefore the output of the blown air outlets, will generally be higher when using Diesel or dual fuel operation, see further details below.

The Truma Combi 6DE can be used in the following ways:

- To provide combined room heating and water heating.
- Simultaneous heating of the room, and heating of water within the appliance.
- To provide water heating only without room heating.

If the water system is not primed, i.e. there is no water within the Combi appliance or in the motorhome water system, the Combi 6DE can still be used to provide room heating.

If only room heating is required, but the motorhome water system is primed (and therefore there is also water in the Combi appliance), then the water within the Combi will also subject to some heating.

Dual energy source operation

Energy sources for room heating and water heating can be diesel, or 230v mains power through an electrical hook up. It is also possible, for optimum performance, to simultaneously select diesel and 230v operation, described as 'Hybrid' energy on the InetX controller.

The diesel supply for the Combi 6DE is the Fiat fuel tank, a fuel supply shared with the vehicle engine. The fuel take off pipe that supplies the Combi 6DE is positioned to prevent use of the last 25% of the diesel tank, with the intention allowing the owner to start the vehicle engine and drive to a nearby fuel station. Please do ensure that the diesel tank is comfortably above 25% full (using the Fiat fuel gauge), before selecting diesel as a fuel source for heating.

When selecting 230v as an energy source, two settings are available, 900W or 1800W. Selecting a higher rating increases performance but also increases power consumption. Consider using a setting to suit the rating of the mains hook up supply. (See consumption table in this handbook).

Please note that although the Carrera has an inverter to provide a 230v supply to cooking appliances and 230v sockets, from the leisure battery, it is not possible to use this inverter supply as a source of electricity for the Combi 6DE.

The motorhome's control system will only allow 230v operation of the Combi 6DE, if a mains hook-up is connected, and both the illuminated buttons on the Sargent PSU ('Heating System' and 'Charger') are ON / illuminated. Away from a mains hook-up, only the diesel supply can be used as an energy source for room heating and water heating.

Please note, the Combi 6DE also requires a 12v supply from the leisure battery, to operate.

Truma Combi InetX 2 Controller (and Combi 6D room temperature sensor)



The InetX 2 controller is a touch-screen controller used to control the Combi 6DE appliance. The controller and appliance are also connected to a room temperature sensor, typically located below the rear offside locker.

Please note a 2nd temperature sensor, mounted on the control panel furniture, is used with the Sargent control system, and room temperatures displayed on InetX and Sargent control panels may differ slightly. The Sargent temperature sensor and its information display is for information only, and does not / cannot influence heating system operation.

An InetX App is available, for use in close proximity to the InetX controller. For details of the InetX 2 controller and a link for downloading the App, please see:

https://www.truma.com/gb/products/operating-systems-gb/inet-x-panel-2/

Full operating instructions for the InetX controller and Combi 6DE appliance are available via the 'Support' section of the above website, direct link:

https://www.truma.com/gb/service/download-center/

Before using the Combi 6DE, please familiarise yourself with the instructions, these include:

- Warnings regarding safe use of the system
- Instructions for the filling and draining of the water heater
- What to do in the event of a problem occurring

Room Heating:

On the InetX controller, select 'Room Climate' for room heating. Next, on the Room Climate page that follows:

Use the central part of the display and the + / - buttons to choose a target room temperature

Use the bottom right energy source selection button to enter a further screen, which allows diesel selection to be ON or OFF, and selection of electricity to be off, 900W or 1800w. Once a single or dual energy source is selected, press the back button to return to the earlier heating page.

At the top right of the heating page, it is then also possible to select an efficiency mode that suits your requirements. (eco, boost etc)

From the room heating page, it is also possible to turn off room heating, using the power symbol button at the top right of the heating page.

Water Heating:

On the InetX controller, select 'Hot Water' to enter the water heating page.

Using the central part of the screen, select 'Comfort' or 'Shower' for the water heating mode; Shower will provide a quicker water heat up time, but will increase energy use and may temporarily reduce room heating output.

The button at the bottom right of the screen allows energy source selection in the same way as room heating – Diesel on/off, and electricity off/900W/1800W.

If water heating is no longer required, pressing the power symbol button at the top right of the water heating page, will cease the water heating operation.

If neither room heating or water heating are required, there is a 'Turn Off' button on the main page of the InetX 2 controller, which can be used to further reduce energy consumption. Later pressing the home button will turn the controller back on.

9.2 Dometic Compressor Fridge



The RC10.4T compressor fridge uses a 12v DC supply for all control and cooling of the refrigerator.

When driving, the fridge operates using the on board leisure battery and the vehicle alternator as a power supply. Ensure the System Shutdown button on the Power Supply Unit is in/ON while driving.

When parked and on mains hook up, the fridge operates using the on board leisure battery and on board battery charger as a power supply. Ensure the battery charger is ON, using the illuminated button on the Power Supply Unit.

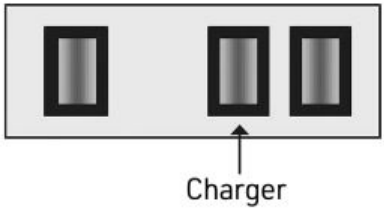

When parked without mains hook up, the fridge uses the on board leisure battery and fitted solar panel as a power supply. Monitor battery use regularly using the EC940 Control Panel (see page 67) above the entrance door, and return to a mains hook up or driving if the leisure battery becomes depleted.

For full instructions and safety advice relating to this refrigerator, see the paper copy instructions supplied with the motorhome, and/or the electronic versions available at the following location:

https://documents.dometic.com/search

9.3 Dometic Airfryer Microwave Oven

1

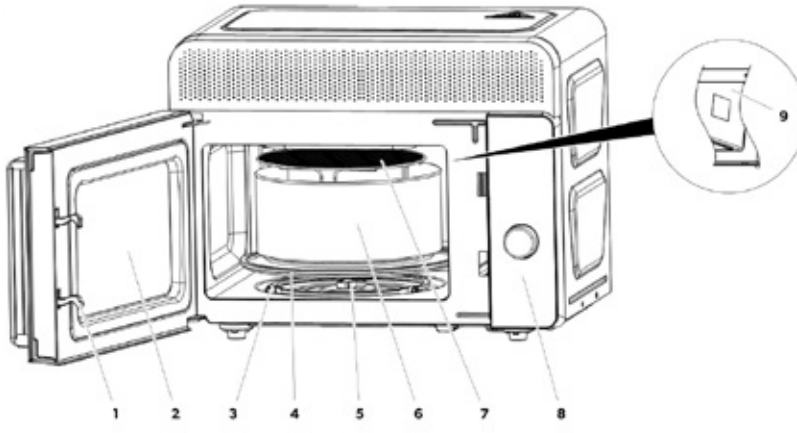

Item in	Description
1	Door lock
2	Viewing window
3	Rotating ring
4	Turntable
5	Rotating axis
6	Air-frying pot
7	Grill rack
8	Control panel
9	Waveguide cover

2



Element	Description
Microwave	Activates the microwave function
Defrost	Activates the defrost function
Reheat	Activates the reheat function
Oven	Activates the oven function
Air Fry	Activates the air fry function
Keep Warm	Activates the keep warm function
Rotary knob	Set cooking duration, foodstuff weight or clock
Menu	Activates the menu function
Combi Cooking	Activates the combi cooking function
STOP	Cancels active function or cooking process
START/+30s	Starts set cooking function

Before first use

Setting the clock

NOTE The device displays a 24-hour clock.

Press and hold **Defrost** for ≥ 3 s.

The clock icon (🕐) is shown.

The hour indicator on the display is flashing.

Set the hours by using the rotary knob.

3. Press **Defrost** to confirm.

v The minute indicator on the display is flashing.

4. Set the minutes by using the rotary knob.

5. Press **Defrost** to confirm.

v The clock has been set.

Operation

Standby mode

In standby mode the device consumes less power and shows the time on the display.

The device enters standby mode automatically after being connected to a power supply, after completing a cooking process, or after not receiving an input for ≥ 15 min.

During a cooking process, press **STOP** twice to reset the device to standby mode.

Turning the display off and on

In standby mode the display of the device can be turned off to consume even less power.

The device is in standby mode.

> Press STOP.

> The display turns off.

> Press any button or turn the rotary knob slightly.

> The display turns on and the device returns to standby mode.

Choosing the right cookware

WARNING! Flying sparks and fire hazard

> Only use the supplied air-frying pot in combination with the grill rack when using the air-frying function.

> Never use metal cookware, cookware with a metallic rim or metallic decorations.

> The only permitted metal cookware is the supplied air-frying pot and grill rack for use with the air-frying and oven functions.

> Never use flammable cookware.

> Never heat food or liquid in sealed or necked containers.

> Never use glazed ceramic cookware.

> Never use recycled paper products.

> Heat-resistant cookware must withstand temperatures of ≥ 120 °C.

> Use round or oval cookware to prevent food from overheating in the corners of the cookware.

Only use cookware that is microwave-safe and suitable for your intended preparation method.

Notes on preparing food

> Place thicker areas towards the outside of the dish, the thinner part towards the center and spread it evenly. Do not overlap if possible.

> Pay attention to the cooking time. Always cook for the shortest indicated time and increase it if necessary. Over cooking may result in smoke and burns.

> Use microwave-safe plastic covers during cooking. Covers prevent spraying and ensure even cooking.

> Turn foods such as chicken and hamburger once during the cooking process. If applicable, stir it from the outside to the center of the dish once or twice during cooking.

> After the cooking process is finished, leave the food in the device for an adequate length of time, to a low it to complete its cooking cycle and to cool down in a gradual manner.

> When heating liquid food or beverages, fil the used container to a maximum of two-thirds of its capacity.

Child lock function

When this function is active, the control panel is locked and all buttons are unusable.

1. Press and hold STOP for ≥ 3 s

   The child lock icon (⚷) is shown.

✓ The child lock function is activated.

2. Press and hold STOP for ≥ 3 s

   The child lock icon (⚷) is no longer shown.

✓ The child lock function is deactivated.

Microwave

WARNING! Fire hazard - Only use cookware suitable for use with the microwave function.

Power level	Power output	Application
100P	1150 W	Quick and thorough cooking
90P	1035 W	
80P	920 W	Medium express cooking
70P	805 W	
60P	690 W	Steaming
50P	575 W	
40 p	460 W	Defrosting
30P	345 W	
20P	230 W	Keeping warm
10P	115 W	

1. Press `Microwave` repeatedly to set the desired power level.
   The power level range is 10P–100P.
v The microwave icon (≋) is shown.
2. Set the cooking duration by using the rotary knob.
   The max. cooking duration is "60:00" (60 min).
3. Press `START/+30s` to start the cooking process.
v A buzz sounds at completion.

- Press `START/+30s` during the cooking process to increase the cooking duration by 30 s.
- Press `STOP` during the cooking process to pause it.
- Press `START/+30s` during a paused cooking process to resume it.
- Press `STOP` during a paused cooking process to cancel it and return to standby mode.

Express cooking

> Press `START/+30s` to immediately start a cooking process for 30 s.
v A buzz sounds at completion.

- Press `START/+30s` during the cooking process to increase the cooking duration by 30 s.

Defrost

WARNING! Fire hazard - Only use cookware suitable for use with the defrost function.

1. Press `Defrost` repeatedly to select the desired defrosting mode.
   - dEF1: Defrosting by duration.
   - dEF2: Defrosting by weight.

   ⌄ The defrost icon is shown ( ). When defrosting by weight, the weight icon (9) is also shown.
2. Set the defrosting duration or weight of the frozen food by using the rotary knob.

   The max. defrosting duration is "60:00" (60 min).

   The defrosting food weight range is 200 ... 3000 g.
3. Press `START/+30s` to start the defrosting process.

   In dEF2 mode: A beep sounds periodically to indicate when to turn over the defrosting food.

   ⌄ A buzz sounds at completion.

- In dEF1 mode: Press `START/+30s` during the defrosting process to increase the defrosting duration by 30 s.
- Press `STOP` during the defrosting process to pause it.
- Press `START/+30s` during a paused defrosting process to resume it.
- Press `STOP` during a paused defrosting process to cancel it and return to standby mode.

Reheat

WARNING! Fire hazard - Only use cookware suitable for use with the reheat function.

1. Press `Reheat` to select the reheat function.

   ⌄ The reheat icon ( ) and the weight icon (9) are shown.
2. Set the reheating food weight by using the rotary knob.

   Options are: 200 g,400 g, 600 g, 800 g, 1000 g.
3. Press `START/+30s` to start the cooking process.

   ⌄ A buzz sounds at completion.

- Press `STOP` during the reheat process to pause it.
- Press `START/+30s` during a paused reheat process to resume it.
- Press `STOP` during a paused reheat process to cancel it and return to standby mode.

Oven

WARNING! Fire hazard - Only use cookware suitable for use with the oven function.

Ensure that the cookware is not in contact with the heating element.

1. Press `Oven` repeatedly to select the desired cooking temperature.

   The temperature range is 90 ... 180 °C in intervals of 10 °C.

v The oven icon (▪▪▪) and the temperature icon (°C) are shown.

2. Set the cooking duration by using the rotary knob.

   The max. cooking duration is "60:00" (60 min).

3. Press `START/+30s` to start the cooking process.

v A buzz sounds at completion.

- Press `START/+30s` during the cooking process to increase the cooking duration by 30 s.
- Press `STOP` during the cooking process to pause it.
- Press `START/+30s` during a paused cooking process to resume it.
- Press `STOP` during a paused cooking process to cancel it and return to standby mode.

Keep warm

WARNING! Fire hazard - Only use cookware suitable for use with the keep warm function.

1. Press `Keep Warm` repeatedly to select the desired temperature to be kept.

   The temperature range is 65 ... 85 °C in intervals of 10 °C.

v The air-fry icon (✇) is shown.

2. Set the keeping-warm duration by using the rotary knob.

   The max. keeping-warm duration is "02:00" (2 h).

3. Press `START/+30s` to start the cooking process.

v A buzz sounds at completion.

- Press `STOP` during the keeping-warm process to pause it.
- Press `START/+30s` during a paused keeping-warm process to resume it.
- Press `STOP` during a paused keeping-warm process to cancel it and return to standby mode.

Auto cooking

Note

- Ensure the temperature of your food is 20 … 25 °C prior to cooking.
- Temperature, weight and shape of the food will greatly influence the cooking result. Adjust cooking duration for best results.

Display	Kind of food	Quantity options
A.1	Potato	250 g, 500 g, 750 g
A.2	Pasta	50 g, 100 g, 150 g
A.3	Pizza	200 g, 400 g
A.4	Popcorn	100 g
A.5	Vegetable	200 g, 400 g, 600 g
A.6	Beverage	1 cup, 2 cups, 3 cups (1 cup equals approx. 250 mL)
A.7	Meat	200 g, 400 g, 600 g
A.8	Fish	200 g, 400 g, 600 g

1. Press `Menu` repeatedly to select the desired kind of food to cook.
   ⌄ The auto cooking icon (A) and the weight icon (g) are shown.
2. Set the quantity of the food by using the rotary knob.
3. Press `START/+30s` to start the cooking process.

⌄ A buzz sounds at completion.

- Press `STOP` during the cooking process to pause it.
- Press `START/+30s` during a paused cooking process to resume it.
- Press `STOP` during a paused cooking process to cancel it and return to standby mode.

Combination cooking (microwave oven)

WARNING! Fire hazard - Only use cookware suitable for use with the combination cooking function.

The combination cooking function combines the microwave function (30 %) and the air-fry function (70 %).

1. Press `Combi Cooking` repeatedly to select the desired temperature to be kept.
   The temperature range is 90 … 200 °C in intervals of 10 °C.
   ⌄ The microwave icon (≋) and the air-fry icon (✇) are shown.
2. Set the cooking duration by using the rotary knob.
   The max. cooking duration is "60:00" (60 min).
3. Press `START/+30s` to start the cooking process.
   ⌄ A buzz sounds at completion.

- Press `STOP` during the combination cooking process to pause it.
- Press `START/+30s` during a paused combination cooking process to resume it.
- Press `STOP` during a paused combination cooking process to cancel it and return to standby mode.

Cleaning

WARNING! Electrocution hazard - Disconnect the device from the power supply before each cleaning.

WARNING! Fire hazard - Clean the device regularly to keep it free from any food residues and grease.

NOTICE! Damage hazard - Do not use steam to clean the device. Let the turntable cool down for ≥ 20 min before putting it into cold water.

Ensure no detergent residue is left on the door seals.

NOTICE! Damage hazard - Never clean the device under running water or in dish water. Do not use sharp or hard objects, abrasive cleaning agents or bleach during cleaning as these may damage the device.

Note

Consider activating the child lock function before cleaning to prevent accidental operation (Child lock function) .

1. Remove the turntable, rotating ring and rotating axis (Fig. **1** on page 6, **3**, **4**, **5**) from the device and wash them with mild soap water.
   Allow to dry thoroughly.
2. Clean the inside and outside of the of the device with a damp cloth.
   Ensure to clean the door seals thoroughly.
3. Dry the inside and outside of the device with a dry cloth.
4. Insert the turntable, rotating ring and rotating axis back into the device.

Eliminating odors

Over time, the device may absorb odors from the food.

The following measures reduce those odors.

Step 1	Step 2
Place a cup filled with several lemon slices into the device.	Start a cooking process on a high power level for 2 … 3 min.
Place a cup of black tea into the device.	Start a cooking process on a high power level for 2 … 3 min.
Place some orange peels into the device.	Start a cooking process on a high power level for 1 min.

Maintenance

If the lamp inside the device is damaged, have it replaced by the manufacturer, a service agent or similarly qualified person to avoid safety hazards.

To check if the device is working properly, perform the following test:

1. Place a glass filled with approx. 150 mL of water into the device.
2. Close the device door and start a cooking process for 1 min.
3. Ensure the following:
- The lamp inside the device is lit.
- The cooling fan works (check rear ventilation openings).
- The turntable inside the device rotates.
- The water is hot after the cooking process is finished.
4. If any of the above functions is not ensured, contact an authorized service technician.

9.4 Dometic CVI1525 Induction Hob

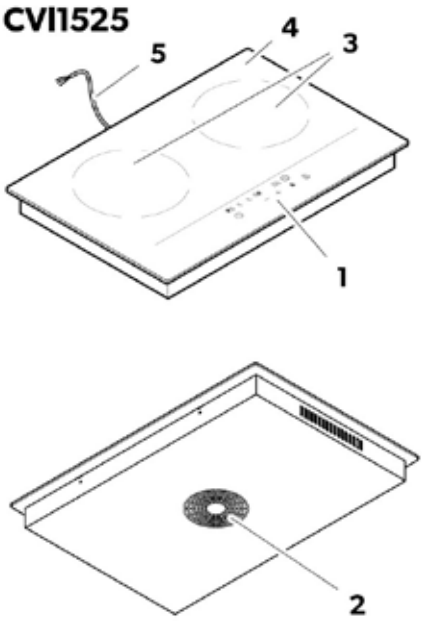

Item	Description
1	Control panel
2	Ventilation
3	Cooking zone
4	Glass plate
5	Power cable

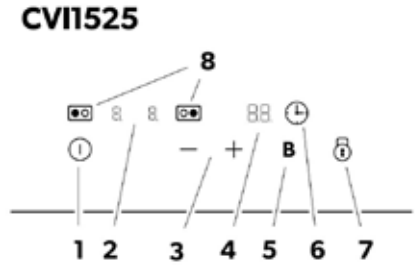

Item	Description
1	ON/OFF button
2	Power level indicator
3	Heat level buttons
4	Time indicator
5	BOOST button
6	Timer button
7	Lock button
8	Cooking zone selection buttons

Operation

CAUTION! Risk of injury

Never operate the cooktop when the vehicle is in motion.

NOTICE! Damage hazard

> Do not slide cookware over the cooktop.

> Lift the cookware when you want to remove it from the cooktop.

> When traveling abroad, ensure the voltage and frequency of the mains supply matches the marking of the cooktop.

Observe the following hints and recommendations:

• If the device is intended to operate by inverter power, the inverter should have a minimum continuous output rating of at least 2300W and be connected to a lithium battery bank with a battery management system that can apply the necessary loads.

- If you are using an inverter with a power output of less than 2000W, only one induction zone should be used at a time.
- Both induction zones can be used with mains power supply. However, the shore power input of a recreational vehicle is limited to 15A. The operation of multiple devices, e.g., air-conditioner, hot water systems, air fryers, microwaves, space heater, or hair dryer at

the same time may overload the input of the recreational vehicle. In this case reduce the load and reset the fault-current circuit breaker, if necessary.

- The buttons respond to touch. Do not use pressure to operate the buttons.
- Use the fingertip and not the fingernail to operate.
- Ensure the buttons are always clean and dry so that the operation is not affected.

Choosing the right cookware

WARNING! Health hazard

Do not heat up empty pots or pans and do not use cookware with a thin bottom. The cookware can heat up very quickly. The bottom of the cookware can melt and damage the glass plate.

NOTICE! Damage hazard

Do not use cookware with jagged edges or a curved base.

NOTE

•Only use cookware with a base suitable for induction cooking.

• Do not use cookware made of pure stainless steel, aluminum or copper without a magnetic base, glass, wood, porcelain, ceramic and earthenware.

> Use cookware with a bottom diameter of at least 140 mm .

> Perform a magnet test to check if your cookware is suitable for the operation of the cooktop by moving a magnet towards the base of the cookware.

> The cookware is suitable for the cooktop if the magnet is attracted to the cookware.

Heat settings

The following settings are guidelines. The exact setting will depend on the cookware and the amount of food to be cooked.

Power level	Suitability
1–2	• Warming of small amounts of food • Melting foods that burn quickly
3-4	• Slow simmering
5-6	• Slow warming • Reheating
7-8	• Fast simmering • Cooking rice
9	• Stir-frying • Searing • Boiling water

Using the cooktop

1. Touch the ⓘ button.
   ✓ The indicators display – or - -.

   The standby mode is activated.
2. Place a suitable cookware on the cooking zone to be used (See Choosing the right cookware on page 12).
3. Touch the button of the cooking zone that is to be used.
   ✓ The power level indicator displays 0.

   If the power level indicator displays ⏲, the display switches off after 2 minutes (See Troubleshooting on page 16).
4. Set the cooking zone power level by using the — and + buttons

   The cooktop switches off after 1 minute if no power level is set.

Switching off

1. Touch the button of the cooking zone to be switched off.
2. Touch the — button until the time indicator displays 0.
   ✓ H is displayed as long as the cooking zone is hot.
3. Touch the ⓘ button
   ✓ The cooktop is switched off.

Using the locking function

1. Touch the 🔒 button
- The time indicator displays Lo.

  All touch buttons, except the ⏻ button and the 🔒 button, are disabled.

2. Touch and hold the 🔒 button for a few seconds.
- The time indicator no longer displays Lo.

  All touch buttons are enabled.

Using the BOOST function

When the BOOST function is activated, the cooking zone is heated up for a max. duration of 5 min at a higher power level.

The BOOST function can only be performed on the **right/upper** cooking zone.

1. Ensure the cooking zone, on which the BOOST function is to be activated, is set to the max. power level.

   If the cooking zone is not operating at the max. power level, the power level indicators flash alternately.

2. Touch the ⏺ button of the **right/upper** cooking zone.
- The power level indicator of the selected cooking zone flashes.

3. Touch the B button.
- The power level indicator of the selected cooking zone displays P.

  The power level indicator of the selected cooking zone returns to 9 after 5 min.

4. Repeat step 2–3 to deactivate the BOOST function before the 5 min are up.

Using the timer function

The timer can be set on both cooking zones.

1. Ensure the cooktop is turned on.
2. Touch the ⏺ button of the cooking zone on which the timer is to be set.
3. Touch the ⏲ button.
- The time indicator displays 30 (30 min).

  The dot next to the power level indicator lights up to indicate the selected cooking zone.

4. Set the timer by using the — and + buttons.
   - Touch the — or + button once to change the timer by 1 min.
   - Touch and hold the — or + button to change the timer by 10 min.

   If the set timer exceeds 99 min, the timer returns to 0 min.
- The timer is running.

  The time indicator displays the remaining time.

  The time indicator flashes for 5 s.

  The time indicator displays -- when the set timer has run out.

  The power level indicator displays H until the temperature of the cooking zone is below 60 °C.

5. Set the timer to 00 (0 min) to switch off the cooking zone.

If you set the timer for both cooking zones:

- The time indicator displays the remaining time of the timer that runs out first.
- The dot next to the power level indicator shows which cooking zone the displayed timer refers to.
- To check on the other timer, touch the ⏺ button of the respective cooking zone.
- When one timer has run out, the time indicator displays the remaining timer.
- The power level indicator of the cooking zone whose timer ran out displays H until the temperature of the cooking zone is below 60 °C.

Saving energy

> Switch off the cooktop if it is not in use.

> Use a cookware with a diameter as large as the selected cooking zone to use energy efficiently.

> Always use a lid when cooking to reduce heat loss and use less energy for cooking.

> Reduce the energy supply early to finish cooking food with the residual heat in the cookware.

Cleaning and maintenance

NOTICE! Damage hazard

> Do not use any sharp or hard objects for cleaning since they may damage the cooktop.

> Remove spiled food with a safe glass scraper after the cooktop has cooled.

> Only use standard commercial cleaning agents that are suitable for glass surfaces.

> Do not use a high jet or a steam cleaner to clean the cooktop.

NOTE

The cooktop must be inspected by qualified personnel once a year.

> Clean the cooktop with a soft, damp cloth.

Find additional care instructions for stainless steel and glass surfaces online on

qr.dometic.com/beVsW0

9.5 Thetford toilet

Cassette C260S

Your motorhome is fitted with a Thetford C260 toilet, which is plumbed directly into the motorhome water system, and does not have its own flush tank. Using the C260 model number, please read the user instructions for the toilet, which are available from the following location:

https://thetford-europe.com/gb/products/toilets/cassette-toilets/c262-cwe-plastic-bowl

If you are unable to view the documents on line, please contact the supplier, your dealer or Swift for an electronic or paper copy.

9.6 Windows

When the vehicle is in motion all windows must be closed.

To open, turn the black handles towards the centre of the window on all the catches and then push the window to the desired position on the friction hinges. To close, reverse the operation and pull the window closed and turn the handles so they tighten over the keep.

All opening windows have two catch positions. The first position with the handle in the groove of the keep, is for ventilation. The second is with the handle on the inner part of the keep and seals the window fully closed. When ventilating or closing the window ensure all handles are in the correct position or deformation or bending of the window can occur.

Operating instructions for blinds



To operate the Blind

The blind is housed at the bottom of the cassette and flynet at the top. The metal bar can be pulled up or down as required. On some models there is a silver retaining clip that holds the two together. Rock the clip back to release.

CAUTION: Never leave the blinds fully closed in direct sunlight, even for a short period of time or heat will accumulate between the window and the blind, resulting in a damaged window. **Care instructions:** Clean the blind only with a damp sponge. Clean on a regular basis to avoid dirt particle build up as this can damage the blind material. Use only water or with mild suds or a vacuum cleaner.

In order to avoid material fatigue, do not leave the flynet closed for a long time.

To adjust the tension of the Horrex blind:

Trim panels or window surround will need to be removed before the blind can be re-tensioned.

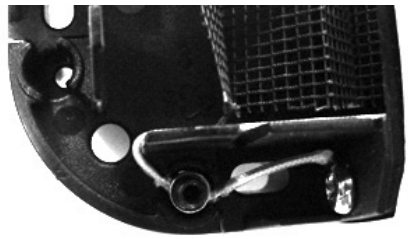

In each corner piece there is an cord tensioner (see photo). By unscrewing the hexagon screw, the cord can move through the cord tensioner. When you pull the cord, the tension will get higher, when you let it move back the tension will get less.

Roof lights

When opening the roof lights, care must be taken to release the locking mechanism as the unit is raised.

Roof lights must be fully closed when driving. Roof lights provide essential fixed levels of ventilation.

Mini Heki Rooflight

To open depress button and push bar upwards. The rooflight has two open ventilation positions and a fully open position.

The blind and flynet operate independently of each other and are engaged by connecting to each other and sliding.

Heki care instructions: Clean the blind only with a damp sponge. Clean on a regular basis to avoid dust/ dirt particle build up as this can damage the blind material. Use only water or with mild suds or a vacuum cleaner.

In order to avoid material fatigue, do not leave the flynet closed for a long time.

Midi Heki Rooflight



With operating bar: To open, depress button and push bar to required position. The rooflight has two open ventilation positions and a fully open position.

To close, reverse the operation and then check if locked into position.9.8 Blind and Flyscreen



The blind and flyscreen operate Independently of each other and are engaged by connecting to each other and sliding.

Safety precautions:

1. Repairs should be carried out only by trained personnel.
2. Inform an approved dealer in case of defects and malfunctions.
3. Before starting off, check the rooflight for damage in the acrylic dome (tension cracks) and the winding mechanism which could arise owing to, for example, branches and other natural causes.
4. Do not step in the acrylic dome.
5. Close the roof light before starting off (check whether it is locked).
6. Do not leave the vehicle with the rooflight open (danger of burglary or from rain).
7. Do not open in strong wind or rain.
8. Before opening, remove snow, ice, dirt, etc. from the acrylic dome.
9. Malfunctions are to be repaired by an approved dealer at once.
10. Do not use caustic detergents (danger of tension cracks in the acrylic dome).
11. Do not operate whilst the vehicle is moving

Care instructions:

- Please clean the acrylic panes with the Seitz Acrylic Cleaner.
- Stains and light scratches on the acrylic pane can be removed by using the Seitz
- Acrylic Polish and the Seitz special polishing cloth.
- Use talcum powder (4 times yearly) to care for the rubber seals
- Clean the blinds only with water and mild soap suds
- The guarantee becomes null and void if these instructions are not followed.

Sunroof blind

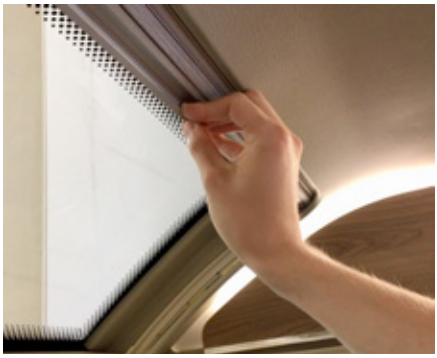

The sunroof blind is operated by pulling the leader rail down. It will then engage into the lower channel. Clean blind with a mild water soapy solution only.

9.7 Cab Seat Swivel



To turn the swivel, slide the BLACK lever rearwards and adjust to the required angle. Before driving off ensure the locking mechanism is fully secure.

9.8 Omnistep slide-out step

Operation

Press the "step out" key to bring the step out until it reaches the end of its run or comes up against an obstacle. The step does not come out if the engine is running. Press the "step in" key to take the step back until it reaches the end of its run or comes up against an obstacle. The step goes back in automatically when the engine is running. In this situation the buzzer sounds until the step is fully closed.

Maintenance

Dirt and frost can prevent the step from operating properly. In this case the rails and moving parts should be cleaned or defrosted.

In case of electric break down

If the step does not retract by the motor

- Remove the front plate of the step. (Fig. 1)
- Remove the connection between the footboard and the arms (with screwdriver and wrench S10).
- Slide out the footboard.
- Reinstall the front plate.

Current drawn

- Working current: 5 A
- Blocking current, when fully extended or retracted: 14 A

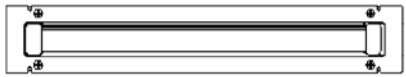

Fig. 1 Front plate

9.9 Thule 6300 Awning

General remarks:

- An awning is a sun and not a rain protection. The awning should be in closed position in case of storm, snowfall or heavy rainfall.
- The awning can not be used without putting out the support arms.
- The fabric may not be rolled up wet for a longer period.
- Clean the awning only by using water or OMNI CLEANER.

Users instructions:

12. Adjust the crank to the required height.

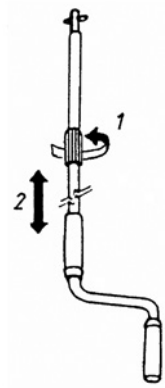

Fig. 1

13. Introduce the crank arm into the bayonet joint.

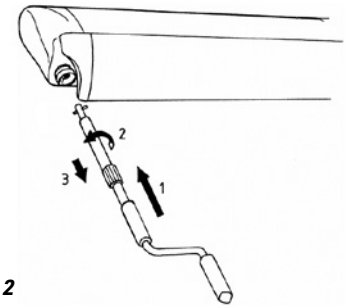

Fig. 2

14. Unroll the awning while keeping the crank down. The awning will only open after a couple of turnings.

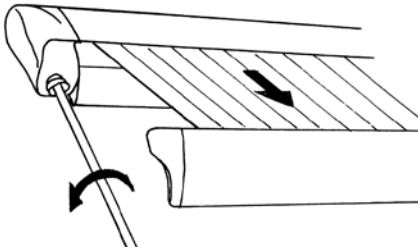

Fig. 3

15. Unroll till 1 m max. Then put out the support arms before further unrolling

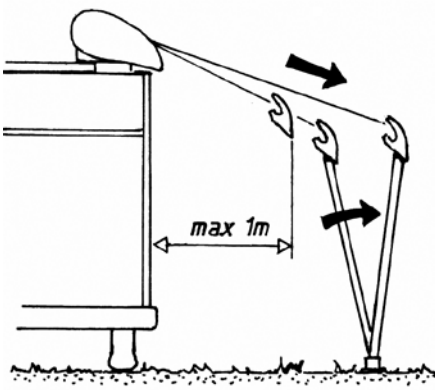

Fig. 4

16. Slide the support arms out of the front profile

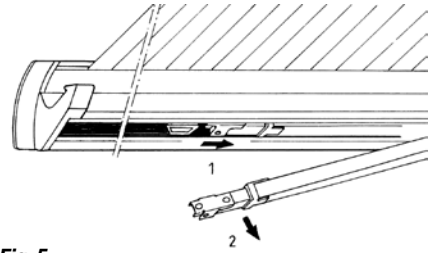

Fig. 5

17. Adjust them to the required height. The fabric can be tightened by rolling up a little.

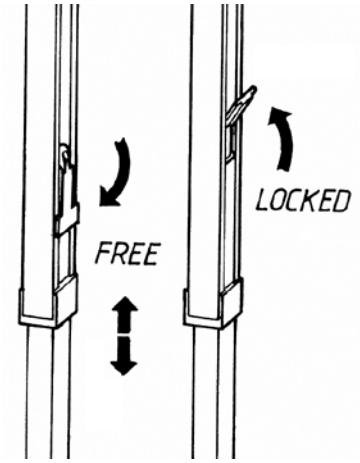

Fig. 6

ⓘ **Note:** Never put out the support arms that high, that the fabric jams between the arms and the box.

18. Fasten the support arms.

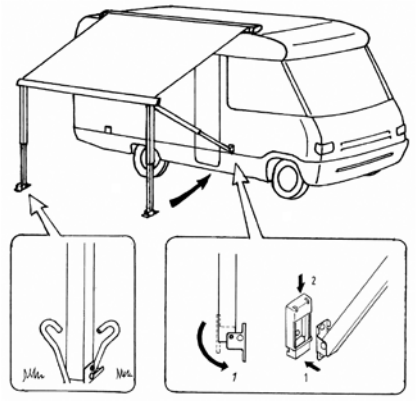

Fig. 7

19. Install the tension rafter (for 3.75 m awning).

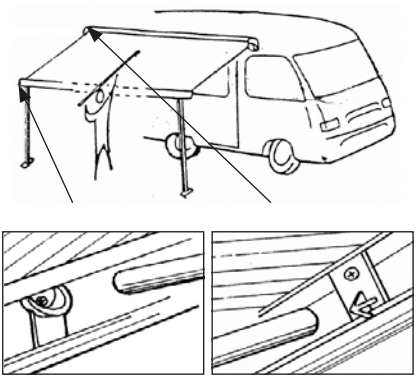

Fig. 8

20. When raining, lower one side of the awning in such a way that the water can run down the fabric. Prevent the fabric from flying up by a sudden wind blow by using the hold down kit (optional).



Fig. 9

21. The front profile locks automatically when rolling up

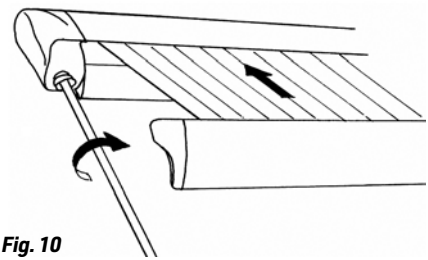

Fig. 10

9.10 Status 570 Digital antenna system

Travelling

Do not travel:

- with the antenna raised
- with the antenna set for vertical signals

To reduce the possibility of damage when travelling, point the antenna backwards.

The RED SPOT on the bottom of the mast indicates the front of the Antenna.

Your motorhome is fitted with a Status 570 TV aerial. Please read the user instructions for the TV aerial, which are available from the following location:

https://visionplus.co.uk/instructions/

If you are unable to view the documents on line, please contact the supplier, your dealer or Swift for an electronic or paper copy.

9.11 Care of laminate tops, tables, furniture and doors

DO NOT use abrasives, chemically treated cloths or aggressive detergents as these may cause damage.

DO NOT place hot objects on laminated surfaces i.e. tops, tables. Any temperatures 70°C and over will cause permanent damage.

Clean worktop surfaces, furniture and door fascias with a soft, slightly damp cloth, dry off with a soft cloth.

9.12 Furniture doors

During normal travelling, vehicle vibration and flexing may cause some of the furniture doors to become out of alignment. For your convenience many hinges are adjustable.

9.13 Table storage

Tables should be stored away in their dedicated storage locations when travelling (inside wardrobes or on the bulkhead in front of the rear beds). Ensure they are securely clipped into place whilst in transit.

To avoid damage, care must be taken when removing tables from their stored positions.

9.14 Shower

When using the shower, always ensure that the shower door is fully closed thus avoiding water spray on unprotected areas.

- Orbit shower heads are provided with a button at the side of the head to allow users to control the flow of water.Care should be taken as water may become hot temporarily when switched on until it mixes and regulates.
- Small children should be supervised at all times when using the shower.
- We recommend unfastening the shower head before travelling and storing safely to prevent it becoming detached whilst travelling.

9.15 Colour reference

The colour code for touch ups or resprays for all Fiat cab components Artense Grey 113. Some dealer special cabs may have their own colour specified from the Fiat standard range. For Fiat cabs other than specified above contact your dealer to obtain a colour match.

Please be aware that colours can fade over time, and therefore, if the vehicle is more than a few years old, it is suggested a colour match be obtained.

9.16 Sliding Door and Rear Door Flyscreens

Operation

The sliding and rear door flyscreens run on tracks mounted to the floor and the furniture panels above and moves across from the side. They are tensioned with cords that are fixed at floor level near to the side. When the vehicle door is open pull the blind from the central part of the vertical handle avoiding twisting to close the blind. Ensure flynet is open before closing the vehicle door.

Care

Clean only with a damp sponge ensuring dirt build that would affect the running tracks is removed. Use only clean water with mild suds or a vacuum cleaner. In order to avoid material fatigue, do not leave the flyscreen closed for a long period. Take care with high winds when the flynet is closed.



10. Motorhome Care

10.1 Winterisation 104

10.2 General care 106

10.3 Condensation 108

10.4 Changing Exterior Bulbs 109

10.5 Interior 109

10.6 Side Walls, Roof Lining 109

10.7 Soft Furnishings 109

10.8 Leather care 109

10.9 Work Surfaces 110

10.10 Cupboard Catches 110

10.11 Bathroom, Shower Room and Kitchen Equipment 110

10.12 Furniture 110

10.13 Kitchen Drainer and Cutting Board 110

10.14 Changing interior light fittings 110

10.15 Caring for the environment 110

10.16 Carrera 184 Double bed make up instructions (with safety seat) 110

10.17 Rear Bed instructions 194 113

10.18 Bed makeups 114

10.1 Winterisation

The Swift Group recommends the following winterisation points for customers:

Servicing

Arrange (in advance) the yearly service and habitation check, if the motorhome's next service is due while the vehicle is stored.

Plumbing

Water expands as it is frozen, and so trapped water, when it expands, can damage the tap/ valve /pump or pipe it is trapped within. For this reason, (in addition to reasons of hygiene), the water system should be fully drained when not in use, particularly in colder weather.

- Use the switches located in the upper locker in the vehicle to open both the fresh tank and water waste tank drain valves. Ensure that waste water drains into a designated waste water collection area, either directly or by collecting the water in a container for later disposal.
- Open the drain valve (yellow handle) next to water heater, and leave open. See section 7.2.
- Fully open all the taps and shower mixer, move mixer position to the middle, and leave all taps in the open position.
- Unscrew the shower head and shower hose, shake out remaining water and allow water to drain. It is advised to leave the shower head and hose disconnected.
- Run pump for a short time, until all water is expelled.
- After a short while the majority of water will have left the plumbing system. At this point however it is still important to ensure that the pump itself is 'dry'. During this part of the winterisation, a suitable absorbent cloth or container should be used to catch a small amount of spilled water that will result.

Disconnect the pipe work from the pump by pulling the blue quick release tabs, at either side of the pump, at right angles to the pipe work, then pulling the pipe and connectors from the pump. See Fig.1 Run the pump for a short while to expel any remaining water within the pump.

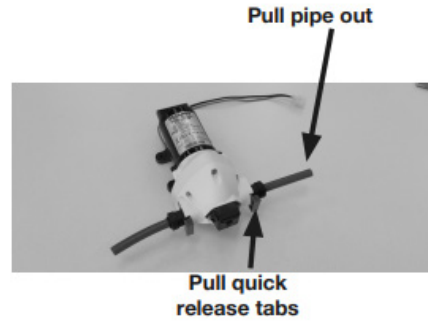

Fig.1

Electrical

- Both the vehicle battery and the LiFePO4 leisure battery installed in your motorhome should be charged before placing the motorhome in storage. This can be done using the mains hook up and on-board charger.
- Please see the Fiat base vehicle handbook for the most relevant instructions related to storage or periods of inactivity – it may be necessary to disconnect the vehicle battery, or recharge the vehicle battery periodically.
- The leisure battery has a very low rate of self-discharge if left in the OFF state described earlier in this handbook, though periodic checks of state of charge would still be recommended, re-charging the battery if the state of charge is found to be low.
- The System Shutdown button on the Sargent PSU should be left in the out/off position, to minimise power consumption.
- If the battery is to be left switched OFF, then the negative connection to the battery should also be disconnected, as described in the earlier sections for removing/ disconnecting the leisure battery. If both power connections are left connected, the battery may receive solar charge, which will switch the battery back ON: With the battery ON, self-discharge is at a higher rate and the frequency of periodic checks would have to be reduced accordingly.
- As described in earlier sections of this handbook, take into account security systems and advise tracking centres before disconnecting battery supplies or turning off the PSU, as appropriate.
- If the System shutdown button the PSU is left ON, and security or other devices are left switched ON, the leisure battery would also have to be left ON. This will further increase the drain on the leisure battery, reducing the time period between checks.
- The fitted solar panel(s) will help to maintain the battery state of charge. It is possible especially in winter, that the gains from solar charging (for example at low level for a few hours a day) may not be sufficient to offset the discharge of the battery which will be 24 hours per day, 7 days per week.
- If a mains supply is available, the on-board mains charger can be used to maintain the leisure and vehicle batteries. Please note that the LiFePO4 leisure battery will not charge at 0deg C or lower, but will still provide power albeit at a reduced capacity. If recharging is required in cold conditions, use the motorhome heating system (or move the battery/motorhome to a warmer location), to slowly increase the temperature of the battery, before recharging.

Appliances

Check the battery expiry date on the smoke alarm and CO detector and replace or remove as required.

- Ensure the fridge is turned off.
- Clean the inside of the fridge.
- Prop the fridge door open, and if possible, the internal freezer compartment door for ventilation.
- Ensure all hob / oven / air fryer / microwave surfaces are clean.
- If the motorhome is going to be left connected to 230v supply while not in use, ensure the hob and air fryer/microwave are unplugged.
- Clean the toilet and empty the cassette and lubricate the seals with an acid free lubricant such as Thetford High Grade Seal Lubricant. See Thetford toilet Users manual

Exterior (Body / Chassis)

- Ensure that all windows, skylights and access doors are closed and secured.
- Ensure all fixed ventilation points (high and low) are clear from debris and obstructions.
- Ensure the vehicle is not parked where falling debris (i.e. leaves, tree sap) could cause damage.
- Avoid leaving the vehicle parked in soft ground, long grass or a potential area where standing water may form.
- Lubricate relevant points on the chassis.

Wheels and Tyres

- Do not store in one position with partially deflated tyres. The tyre walls will suffer and do present a real danger of blow outs, especially when travelling at faster speeds than are allowed in the UK. The wheels should be turned every couple of weeks. If you are removing the wheels, follow the jacking procedure for changing a wheel. Check your tyres regularly for signs of age and deterioration, particularly wear, cracking and blistering. If in doubt consult a reputable tyre fitter.
- A purpose made cover maybe used, but please ensure the cover is a good fit, breathable and securely fitted.

ⓘ **Note:** A poorly fitted cover can rub and damage the bodywork. Non-breathable covers will encourage mould to grow.

Interior (Furniture / furnishings)

- Open all lockers and internal doors, to ensure good circulation.
- Remove cushions and store them in a dry location or ensure all cushions are placed in a well ventilated area.
- Close all blinds and curtains. Customers are reminded to check the tension on blinds after storage if left closed for long periods.
- Thoroughly ventilate the motorhome by opening doors or windows periodically.
- Placing water absorbent crystals in the van during the winter months, will help reduce moisture levels and mould growth.
- We do not recommend leaving portable heaters in the van unattended.

Recomissioning the Water System

Re-connect the water pump by positioning the pipe connectors into the pump housing and pushing the blue tabs into position. It is advisable, after a period on non-use, to flush the water system with a sterilising fluid such as Milton 2. Fill the fresh water tank with water and sterilising fluid (Refer to sterilising fluid instructions for the amount to use). Turn the pump on and open all the taps, ensuring that the water drains away safely to the waste tank.

When the waste tank is full empty the fluid into a designated waste water area. Re-fill the tank with fresh water and flush through the system as described above; repeat this until all traces of the sterilising fluid have been flushed out.

Prepare the toilet system by adding water and Thetford fluid to the toilet waste tank.

Appliances

Before starting motor caravanning after storage, check all appliances and electrical points.

ⓘ **Note:** Preferably not less than once a year, the electrical installation should be inspected and tested by a qualified electrician.

After storage it is advisable to air the Motorhome and clean throughout, especially cooking appliances and the refrigerator.

Replace the bedding if they were removed for storage.

⚠ **WARNING**: Always follow the manufacturers recommended procedures after use of fitted equipment in the Motorhome, before storing for any length of time.

10.2 General care

For care of the vehicle battery please refer to the Fiat handbook in section 'Trouble Shooting'.

All moving parts should be checked for free operation.

Clean all cooking appliances and refrigerator. Lubrication should be carried out at the points illustrated in the general notes on chassis maintenance.

Charge up the on-board batteries every 2 months.

Leave the refrigerator door open. Leave furniture doors and lockers open to allow air to circulate fully.

Modifications - DIY work

Owners need to be aware that carrying out DIY modifications to your motorhome may in certain instances, invalidate the warranty cover and could also affect the safety and structure of the vehicle.

⚠ **WARNING**: WD40 is not recommended for external or internal use

WD40 attacks paintwork and sealants. If a lubricant is required for Interior hinges, Sliding door tracks, Bottle box hinges, Exterior door hinges, Plastic tracking etc. We recommend "Ambersil 40+" this is readily available from most DIY/Automotive retailers including Halford's .

Before carrying out any DIY work within the warranty period, please check with your nearest dealer or contact Supercare customer services on 01482 875740 for advice.

Paintwork

Proper care involves washing the motorhome regularly with a mild detergent rinsing with cold water and leathering off. A good quality, similar coloured car wax may also be applied which will make washing even easier.

Please note: Do not use abrasive-cleaning agents, on the exterior of your motorhome. Stubborn stains may be removed using a soft cloth and mild detergent.

⚠ **WARNING:** Overzealous use of detergents may loosen the decals and / or badges.

Acrylic Windows

The windows in your motorhome are fully double glazed and, with care, will remain sparkling and scratch free.

Acrylic (Plastic) Window Condensation

Unlike domestic double glazed windows, your motorhome windows are not vacuum sealed. Condensation can appear on the window or between both panes. This does not mean there is something wrong with the window or that it is leaking. It is a natural occurrence caused by different temperatures inside and outside, air moisture and properties of acrylic itself. Condensation will disperse after some time. In most cases, condensation can be prevented by adequate ventilation of the vehicle.

Acrylic (Plastic) Window Cleaning

The material used to produce most caravan and Motorhome windows is acrylic plastic. While the acrylic used is very durable, it is able to be scratched with relative ease. Therefore, care must be taken when clearing your vehicle. Never use abrasive and corrosive substances or solvents on windows, such as turpentine, spirit, dishwasher detergents, as they will damage acrylic and/or print. We recommend cleaning with generous amounts of water or a mild cleaner, intended for use on acrylic. Always use a moist sponge or a moist soft cloth as cleaning with a dry cloth can damage the acrylic and leave scratches. When all the dirt has been removed, dry with a leather or similar type of cloth. Care should be taken when using a drying cloth that it is clean and free from grit. Never clean the windows with a high pressure washer. A carwash can also damage the windows and cause scratches or other damage. The catches and stays do not require lubricating.

Removing Tar

Use a proprietary tar remover on your double glazed windows; (available from most leading car accessory or do-it-yourself shops). Do not use petrol or other chemicals.

ⓘ **Note:** The use of a pressure washer on the exterior of your motorhome is not recommended as this may damage the transfers.

10.3 Condensation

What is condensation

Condensation is the process of change of water from its gaseous form (water vapour) into liquid water when it comes into contact with a surface that is cold. Condensation generally occurs when warm air cools quickly and looses its capacity to hold water vapour, and as a result water vapour condenses to form droplets.

Why condensation occurs

Condensation occurs when warm moist air meets a cold surface. The level of condensation will depend upon humidity levels, how moist the air is and how cold the surfaces are they come into contact with.

If the temperature falls below the dew point temperature, it is quite normal for condensation to occur on any material within the motorhome that is cold, for example the external walls, plastic windows etc.

When condensation occurs

Condensation occurs usually in winter months, because ambient temperatures are colder (leading to cold surfaces) and windows and roof vents are opened less so the moist air cannot escape.

Where condensation occurs

Condensation will occur where warm moist air is put into the atmosphere in areas such as in bathrooms (during showering) and in kitchen areas (during cooking).

In the enclosed space of a motorhome, the moist air from the kitchen or bathroom areas will inevitably transfer to the rest of the vehicle, which in turn condenses on cold surfaces leading to visible water droplets. This issue is compounded by warm moist air being generated from normal breathing.

Condensation will also form in cold areas where air movement and ventilation is restricted (e.g. cupuboards, wardrobes, under beds, etc.)

What is important

It is important to provide ventilation and air flow, so that warm moist air can escape, or

be externally cooled, and to use the heating reasonably by not making the motorhome too warm such that people perspire, as this will only serve to generate more moist air and therefore more condensation.

However, in particularly cold periods, where the external ambient temperatures are low, condensation may still form on external walls as the insulation levels may well not be thermally able to cope with the difference between the internal and external temperatures.

How can you prevent condensation

Provide ventilation so that moist air can escape.

a. Good ventilation of the vehicle when cooking or when drying clothes, footwear or pets is essential. Observe when windows begin to show signs of misting and increase ventilation by opening a window slightly by 1cm or opening a roof vent, as these will help, but keep the habitation door closed as much as possible to retain heat.

b. If drying damp clothes or towels, open a window to ventilate the area and allow the moist air to escape.

c. Try to make sure that the caravan is partially heated. It can take a long time for a cold caravan to warm up, so it is better to have a small amount of heat for a long period than a lot of heat for a short time.

d. .After showering, keep the bathroom window or skylights open, and shut the bathroom door long enough to dry off the room.

e. Fixed ventilation is provided in the vehicle, specifically through high level vents within the skylights and low level vents through the floor, it is important not to block these.

f. Electrical heating is dryer than gas heating, and introduces less moisture into the atmosphere. Do not use additional portable paraffin or flue-less gas heaters at all.

g. If left unoccupied and unheated for long periods of time the temperatures can soak down thermally into the entire product and become very cold. Whenever possible, put the heating on at a low level before use by pre heating in cold weather.

h. Even with reasonable ventilation it is likely if the temperature is less than 5oC and the humidity is high that condensation will occur. Ideally the temperature should be kept about 20oC when occupied.

Mould Growth

Any sign of mould growth is an indication of the presence of moisture and if caused by condensation gives warning that heating or ventilation may require improving.

New vehicles

New products take a long time before they are fully 'dried out' because of the moisture in the materials used during manufacture. While this is happening extra heat and ventilation will be required.

10.4 Changing Exterior Bulbs

ALWAYS REPLACE LIKE FOR LIKE

For individual replacement bulb specification, refer to your base vehicle Handbook.

REAR ROAD LIGHT CLUSTERS

Bulb access is from the rear of the cluster. Please see the Fiat handbook for specific details of the clusters and individual lights contained within them.

The rear road light clusters are secured to the rear of the motorhome via nuts located on the rear of the cluster. To access these fixing nuts, an internal panel must be removed.

Two angled panels can be found at the rear of the motorhome, close to the rear door hinges. In the upper sections of these panels, a removable section exists (the removable panel may also house remote thermostats, light switches etc).

To remove the panel, first locate single screw cover caps at the top of the panel, using a flat bladed screwdriver or similar. Removing the screws will then allow the panel to be pulled up away from the corner of the vehicle, exposing a void with access to the rear of the lamp clusters.

Reverse the procedure and push fit the screw cover cap back into place once complete.

10.5 Interior

Follow these guidelines to ensure your investment is receiving the very best attention.

10.6 Side Walls, Roof Lining

A simple wipe over with a damp cloth and a very mild detergent is all that is needed.

10.7 Soft Furnishings

Should be vacuumed occasionally to remove grit and sand and help to keep its smart appearance and ensure long life. The upholstery can be cleaned with a mild, reputable upholstery cleaner. It is recommended that the curtains and pelmets are specialist cleaned only. The foam used in cushions are manufactured to meet fire regulations. It requires time to return to its normal position after prolonged use.

Clean and dust the upholstery and if possible remove before placing the Motorhome into winter storage. Alternatively, stand the cushions on their edges to allow circulation of air. This will reduce the possibility of dampness from condensation. Keep curtains or blinds closed, to minimise fading of furniture.

If the blinds and/or flyscreens remain down for a prolonged period of time, re-tensioning of the springs will be necessary before re-use.

10.8 Leather care

- Leather furniture, if fitted in your vehicle, requires little maintenance. Regular care of leather does ensure its lasting quality and some general rules for regular cleaning and maintenance are:
- Clean the leather with a soft damp cloth taking care not to soak the leather
- For a more thorough clean, use the Bridge of Weir Leather cleaning and protection kit available directly from the distribution centre
- Do not use saddle soap, wax polishes or spray polishes
- Do not use any product or any method of cleaning not recommended by the manufacturer
- Avoid letting buckles, studs and zips come into any direct contact with the furniture
- Avoid drying out the leather by taking extra care where there is heating or blown air outlets

10.9 Work Surfaces

You should not stand very hot items on any of the work surfaces.

10.10 Cupboard Catches

It is advisable to lightly oil all cupboard catches, sliding bolts and hinges from time to time.

10.11 Bathroom, Shower Room and Kitchen Equipment

All the Thermoplastic parts in these areas have easy clean surfaces. To ensure long life and prevent damage you must not use any cleaning materials at all and ensure water temperatures do not exceed 70°C, (putting cold water in first is suggested). After every use, it is essential that you rinse with clean water only and wipe with a soft damp cloth.

Failure to follow these simple instructions may result in premature failure or cracking which will not be covered by any guarantees (including extended warranties).

10.12 Furniture

A simple wipe over with a damp cloth should be all that is required. Polishing with a proprietary brand of wax polish enhances and maintains furniture in showroom condition.

It must be remembered that because the frames of some doors are made of ash, which is a natural product, they can be affected by temperature and humidity and may bow under certain conditions. As conditions change they should revert to their original positions.

10.13 Kitchen Drainer and Cutting Board

You should not stand hot items on to these items. To wash use only warm soapy water, do not use chemicals and bleach.

10.14 Changing interior light fittings

The light fittings in your motorhome are LED, with no user serviceable parts. In the unlikely event of failure of one of these lamps, the entire lamp will need to be replaced - several types of LED lights are intended for semi-permanent installations using self adhesive mounts etc., and dealer assistance may be required should damage or other need for replacement occur.

10.15 Caring for the environment

After many years of service you may decide that your motorhome has become beyond economic repair and should be disposed of. Please ensure that you comply with the end of life vehicle legislation and take it to an authorised treatment facility where it will be properly dealt with to minimise any negative environmental impact. The transaction will be logged at the DVLA, identifying that you are no longer the owner of the vehicle.

10.16 Carrera 184 Double bed make up instructions (with safety seat)

Step 1

Unhook the table from the top rail, fold the leg to the kneeling position and hook the table onto the bottom rail.

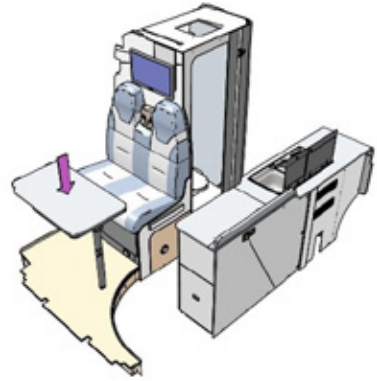

Step 2

Turn the dinette seat base cushion over so it forms a flat base. Remove the lower backrest cushion and store away.

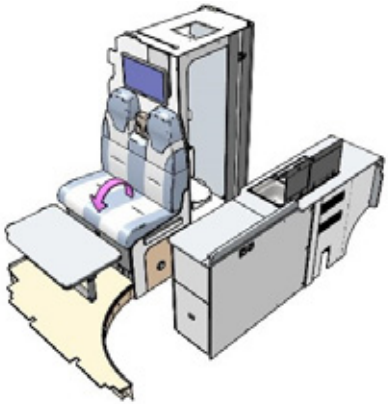

Step 3

Lift up the kitchen worktop. Pull the end of the kitchen unit out and fold the top flap down flat onto the runners.

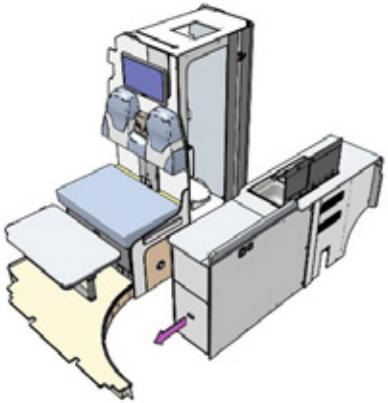

Step 4

Remove the cushions from the end storage in the kitchen unit.

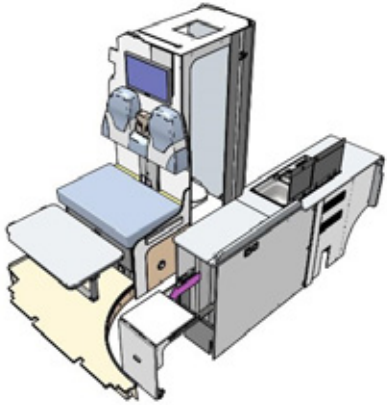

Step 5

Place the cushion, without a board in the bottom, on top of the table at the front against the outer wall.

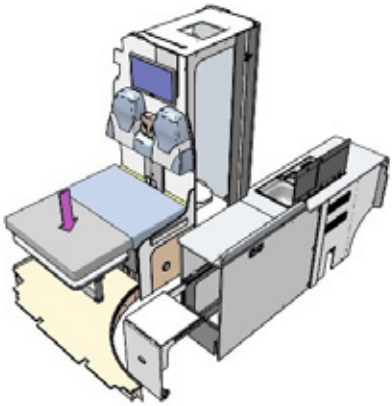

Step 6

Fold the front of the kitchen unit down into the unit to form a flat base.

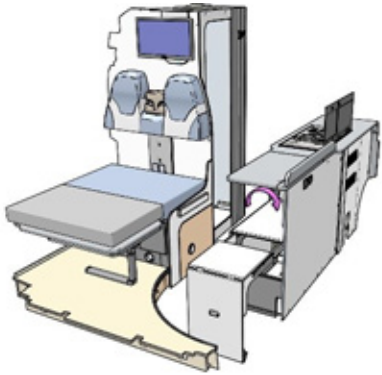

Step 7

Place the first cushion, with a board in the base, at the front supported on the kitchen pull-out and the table opposite.

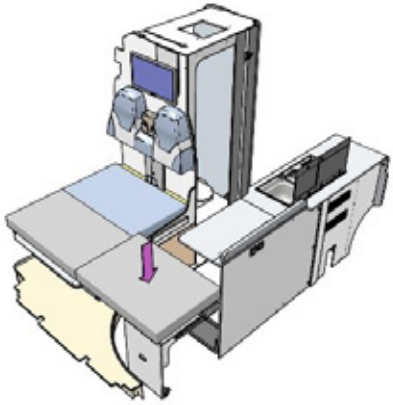

Step 8

Place the remaining cushion, with a board in the base, behind the first cushion supported on the kitchen unit shelf and the support on the bed end. The location buttons should stop the cushions sliding out of position.

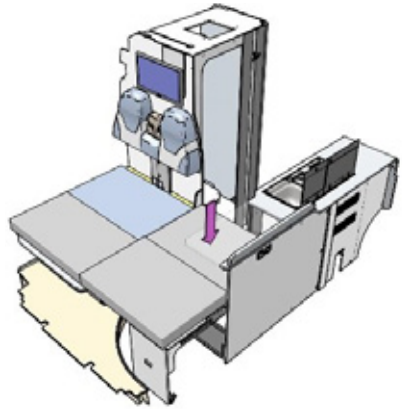

10.17 Rear Bed instructions 194















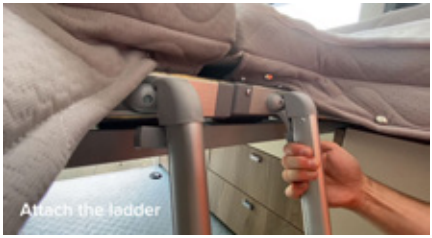

⚠ **WARNING**: The metal bed support rails must be in position before the bed tops are lowered. Failure to do so can result in damage to the bed tops or hinges.

Please ensure the transit straps are engaged when the beds are folded up in the stored position.

10.18 Bed makeups

Carrera 122 Rear bed

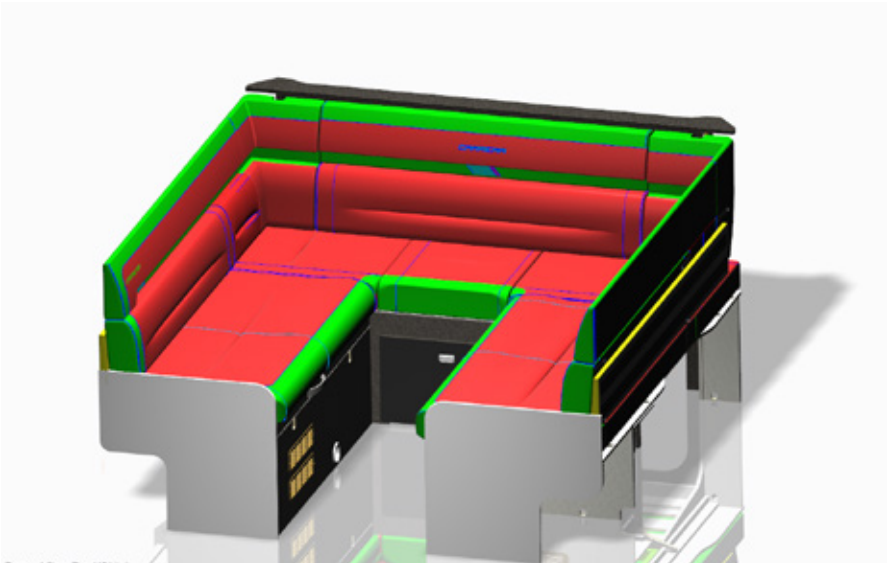

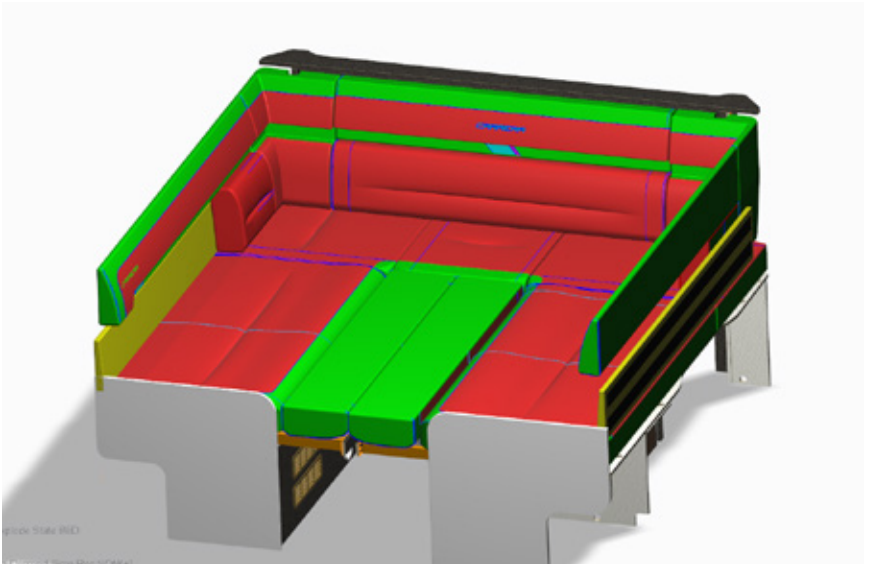

Carrera 132 / 144 / 184/244 Rear Bed

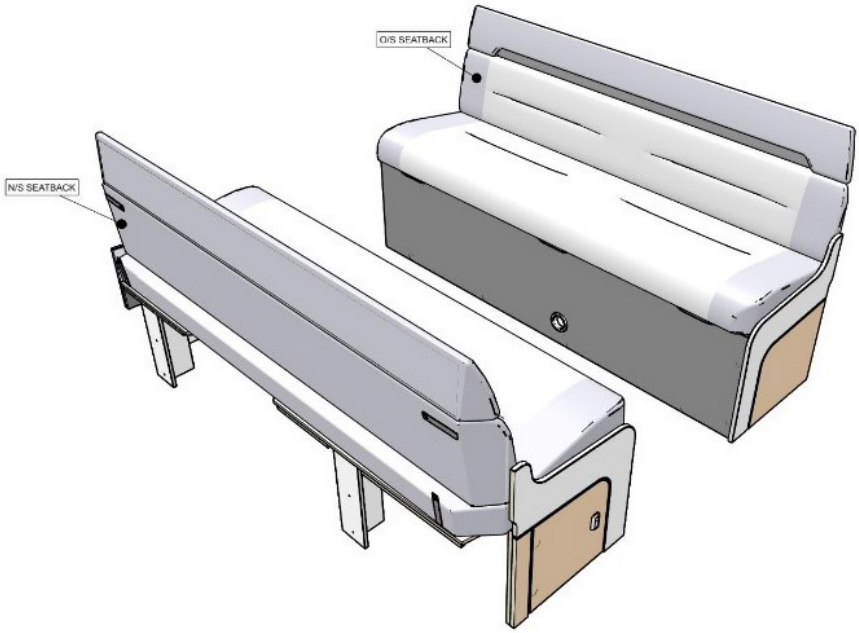

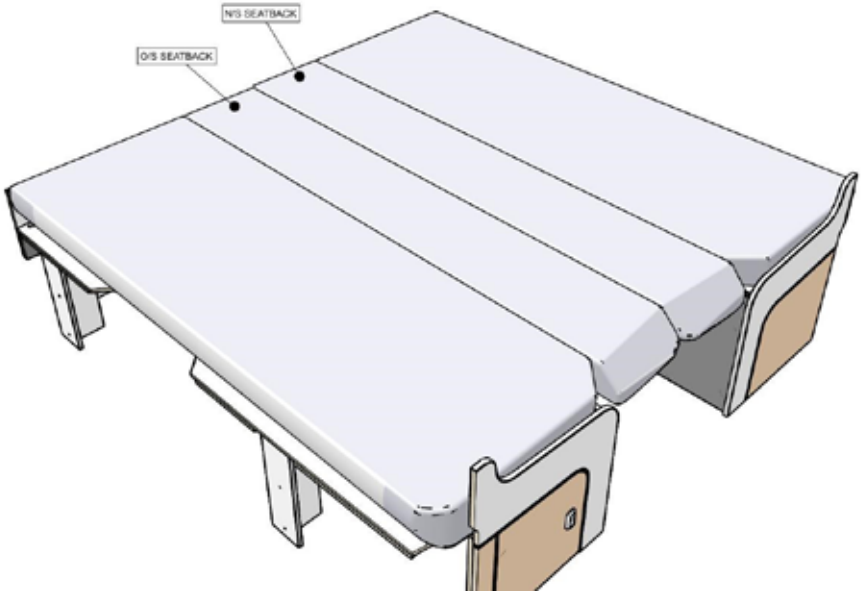

Carrera 184 Front Bed

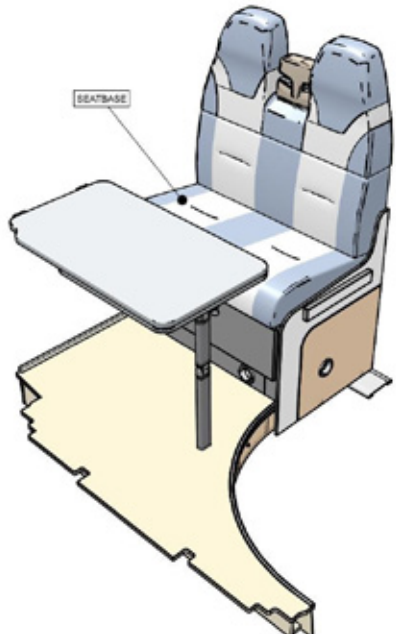

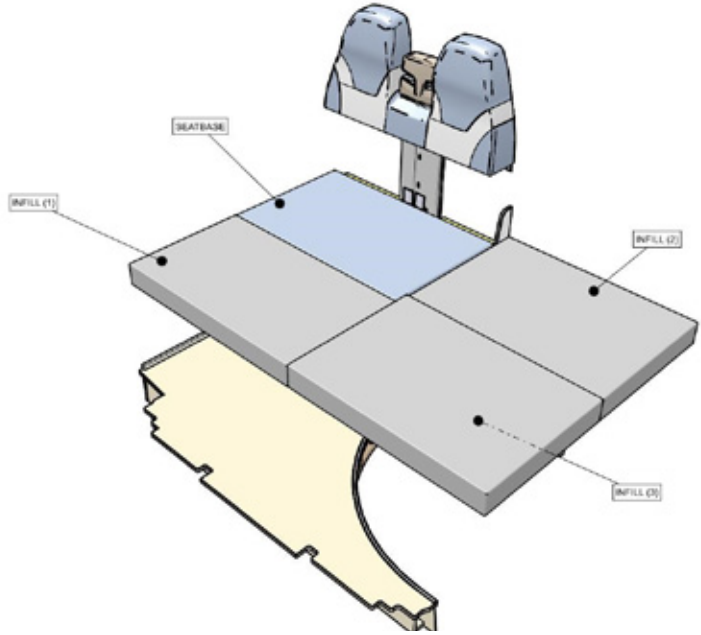

Carrera Pop-Top Roof and bed

Opening the Elevating Roof

ⓘ **Note:** Please make sure to open at least one door or window so that air can escape when opening the roof.





- Open the Velcro fasteners holding the tent fabric (2 fasteners)

ⓘ **Note:** Risk of damage to the tent fabric if the fasteners are not opened!



- Open the Click-Lock catches of the roof on both driver's and passenger's side
- Release the locking of the roof according to the following four steps:



◦ Pull the turning handle of the locking mechanism upwards



◦ Turn the locking handle in a counter clockwise direction to release



◦ Fold the turning handle downwards



- Unhook the locking mechanism from the bracket and fold up and fix on the magnet on the roof

These steps must always be executed at the driver's side as well as the passenger's side.

ⓘ **Note:** After releasing the locking mechanism, it is mandatory to fold up the turning handle and subsequently secure the locking mechanism at the magnet on the roof shell in order to avoid damaging the tent fabric!



- The elevating roof can then be pushed upwards by means of the two handles on the roof. This should be done evenly from both sides to avoid twisting the roof and causing damage to the hinges.



- To access the upper bunk use the folding bunk ladder stored in the rear nearside bed. The ladder hooks on to the brackets on the front section of the roof hatch.



- Fall-Out protection is provided when using the upper bunk. The net is stored under the mattress and is secured to the handles on the roof using the adjustable straps on the upper rail.

⚠ **WARNING**: Use high level bunks (positioned at ≥ 1 000 mm above floor level) for sleeping only, with protection against falling out in position.

⚠ **WARNING**: Care shall be taken against the risk of falling out when high level bunks are used by children. These bunks are not suitable for the use by children under 6 years old without supervision.

Closing the Elevating Roof

ⓘ **Note:** Please make sure to open at least one door or window so that air can escape when closing the roof.



- Ensure all the panels on the tent are zipped closed and the fall out protection is stored away under the mattress.

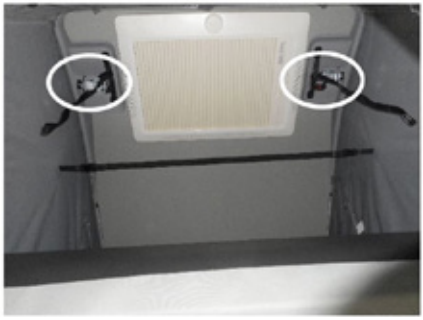

- Check once more that the locking mechanism each side has been fixed to the roof shell by the magnets.
- Fix the internal strap across the roof tent using the plastic clips to ensure the tent folds inwards when closing.



- Pull the roof down carefully using the strap at each side together ensuring the tent fabric will not be jammed in this process.

ⓘ **Note:** The roof should be pulled down evenly and not twisted as this may cause damaged to the hinges.



Fold up the remaining tent fabric thoroughly in the front area and fix using the three Velcro fasteners.

ⓘ **Note**: Make sure that the tent fabric will not be jammed in this process.

- After that, the roof should be locked according to the following steps:



  - Fold-the tent fabric up thoroughly in the area of the locking mechanism.



- Release the locking mechanism from the magnet and hook on to the bracket on the frame



- Pull the turning handle downwards and turn it in a clockwise direction to tighten the locking mechanism.



- Fold the handle upwards to lock in position.

These steps must always be executed at the driver's side as well as the passenger's side.

ⓘ **Note:** Make sure that the tent fabric is not jammed in this process.



- Close the Click-Lock of the roof (driver's side as well as passenger's side) to ensure the locking mechanism cannot pull free.

11. Technical information

11.1 Specification 122

11.2 Water Tank Capacities 124

11.3 Van Conversion Towing Capabilities 125

11.4 Jacking Points 126

11.5 Consumer Circuits - Floor 127

11.6 Power circuits 128

11.7 Consumer Circuits - Roof 129

11.8 230V Circuits 130

11.9 Fuse Allocations 12V & 230V 131

11.10 Cable Colour Chart 132

11.1 Specification

Model	Carrera 122		Carrera 132		Carrera 144	
Roof Profile	Panel Van		Panel Van		Panel Van	
Engine Power	140 MJT	140 MJT Auto	140 MJT	140 MJT Auto	140 MJT	140 MJT Auto
Engine Capacity	2.2L		2.2L		2.2L	
Chassis	Ducato 35QL		Ducato 35QL		Ducato 35QL	
Wheel base	4.04m/13'3"		4.04m/13'3"		4.04m/13'3"	
Designated Passenger Seats excluding Driver	1		1		3	
Berths (sleeping positions)	2		2		2	
Overall Length (no ladder)	6.00m/19'8"		6.36m/20'11"		6.00m/19'8"	
Overall Width	2.05m/6'9"		2.05m/6'9"		2.05m/6'9"	
Overall Width (mirrors folded)	2.26m/7'5"		2.26m/7'5"		2.26m/7'5"	
Overall Width (mirrors extended)	2.51m/8'3"		2.51m/8'3"		2.51m/8'3"	
Overall Height	2.65m/8'8"		2.65m/8'8"		2.65m/8'8"	
Maximum Technical Permissible Laden Mass (A)	3500kg		3500kg		3500kg	
Mass in Running Order (B)	2960kg*	2980kg*	3025kg*	3045kg*	3015kg*	3035kg*
Maximum User Payload (A-B)	540kg	520kg	475kg	455kg	485kg	465kg
Unladen Weight	2837kg*	2857kg*	2902kg*	2922kg*	2892kg*	2912kg*
Essential Habitation Equipment	0kg		0kg		0kg	
Thermal Insulation Grade	Three		Three		Three	

Notes:

1. The Maximum User Payload includes:

Conventional load (this is the allowance for passengers)

Essential habitation equipment (items and fluids required for safe and proper functioning of habitation equipment)

Optional equipment (items available from the manufacturer over and above the standard specification)

Personal effects (those items not covered by the above)

2. The Mass in Running Order is the mass of the unladen vehicle including a 75kg allowance for the driver plus engine coolants, Adblue & windscreen fluid @100% full, fuel tank @ 90% full.
3. The Mass in Running Order is calculated with the fresh water tank and water heater empty. If you travel with water in the fresh water tank or water heater then the payload will reduce accordingly.

* Estimate

Model	Carrera 184		Carrera 194		Carrera 244	
Roof Profile	Panel Van		Panel Van		Pop Top Panel Van	
Engine Power	140 MJT	140 MJT Auto	140 MJT	140 MJT Auto	140 MJT	140 MJT Auto
Engine Capacity	2.2L		2.2L		2.2L	
Chassis	Ducato 35QL		Ducato 35QL		Ducato 35QL	
Wheel base	4.04m/13'3"		4.04m/13'3"		4.04m/13'3"	
Designated Passenger Seats excluding Driver	3		3		3	
Berths (sleeping positions)	4		2		4	
Overall Length (no ladder)	6.36m/20'11"		6.36m/20'11"		6.00m/19'8"	
Overall Width	2.05m/6'9"		2.05m/6'9"		2.05m/6'9"	
Overall Width (mirrors folded)	2.26m/7'5"		2.26m/7'5"		2.26m/7'5"	
Overall Width (mirrors extended)	2.51m/8'3"		2.51m/8'3"		2.51m/8'3"	
Overall Height	2.65m/8'8"		2.65m/8'8"		2.75m / 9'0"	
Maximum Technical Permissible Laden Mass (A)	3500kg		3500kg		3500kg	
Mass in Running Order (B)	3120kg*	3140kg*	3120kg*	3140kg*	3125kg*	3145kg*
Maximum User Payload (A-B)	380kg	360kg	380kg	360kg	375kg	335kg
Unladen Weight	2997kg*	3017kg*	2997kg*	3017kg*	3002kg*	3022kg*
Essential Habitation Equipment	0kg		0kg		0kg	
Thermal Insulation Grade	Three		Three		Three	

4. PLEASE TAKE CARE TO ENSURE THAT YOU HAVE ALLOWED FOR THE MASSES OF ALL ITEMS YOU INTEND TO CARRY IN THE MOTOR CARAVAN, e.g. passengers, optional equipment, essential habitation equipment and personal effects, such as clothing, food, pets, bicycles, sailboards, sports equipment etc.

5. ⚠ **WARNING:** - UNDER NO CIRCUMSTANCES SHOULD THE MAXIMUM TECHNICAL PERMISSIBLE LADEN MASS OF THIS MOTOR CARAVAN BE EXCEEDED.

* Estimate

Notes for options:

The payload that can be carried will reduce by the mass of the options selected.

11.2 Water Tank Capacities

	Fresh Water Tank	Waste Water Tank	Water Heater
All models	93 litre	58 litre	8 litre

ⓘ **Note:** For technical data on the base vehicle please refer to the manufacturer's handbook.

11.3 Van Conversion Towing Capabilities

Model	MTPLM	Permissible Front Axle Load	Permissible Rear Axle Load	Recommended Maximum Trailer Weight	Gross Train Weight
CARRERA 122	3500kg	1850 / 1960 Auto	2000kg	2500kg	6000kg
CARRERA 132	3500kg	1850 / 1960 Auto	2000kg	2500kg	6000kg
CARRERA 144	3500kg	1850 / 1960 Auto	2000kg	2500kg	6000kg
CARRERA 184	3500kg	1850 / 1960 Auto	2000kg	2500kg	6000kg
CARRERA 194	3500kg	1850 / 1960 Auto	2000kg	2500kg	6000kg
CARRERA 244	3500kg	1850 / 1960 Auto	2000kg	2500kg	6000kg

Please note that the additional weight of the tow bar and trailer nose weight increases the rear axle loading of the motor home so care should be taken that the rear axle load is not exceeded when towing.

To ensure adequate road holding, the load on the front axle, under all conditions, must not be less than 40% or more than 70% of the total weight.

Care must be taken when distributing loads. The loadings and weights above are maximums and must not be exceeded under any circumstances.

⚠ **CAUTION:** When fitting a towbar, it must meet certain minimum requirements as specified by Type Approval Regulations. The bar will have marked on it the approval standard (94/20/EC or 55R ECE) and the maximum download, or noseweight, that it can accept. It must fit the manufacturer's approved mounting points and must not obscure the towing vehicle's number plate.

11.4 Jacking Points

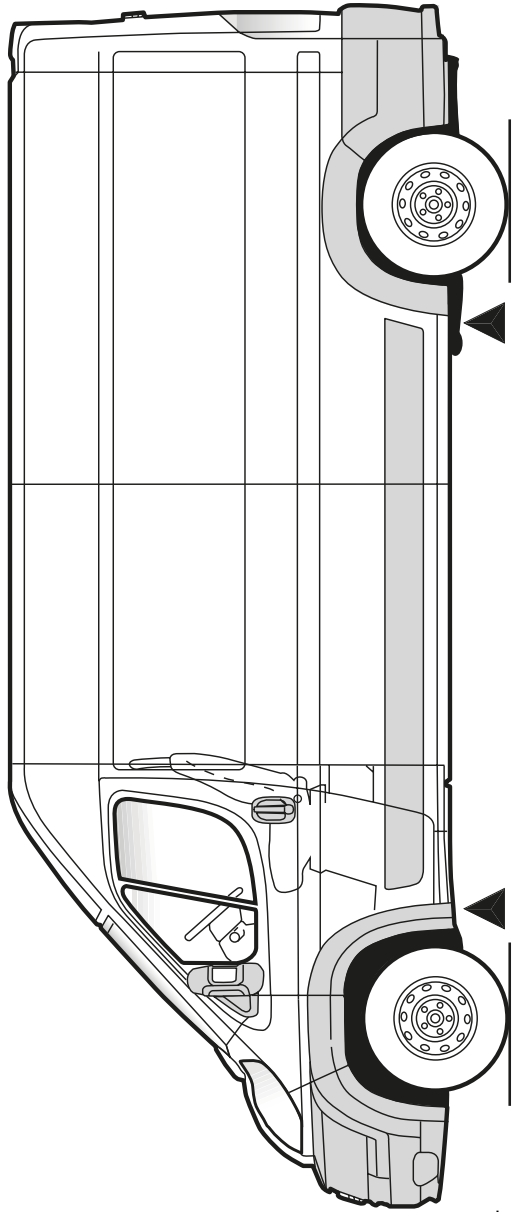

Jacking Point: ▲

11.5 Consumer Circuits - Floor

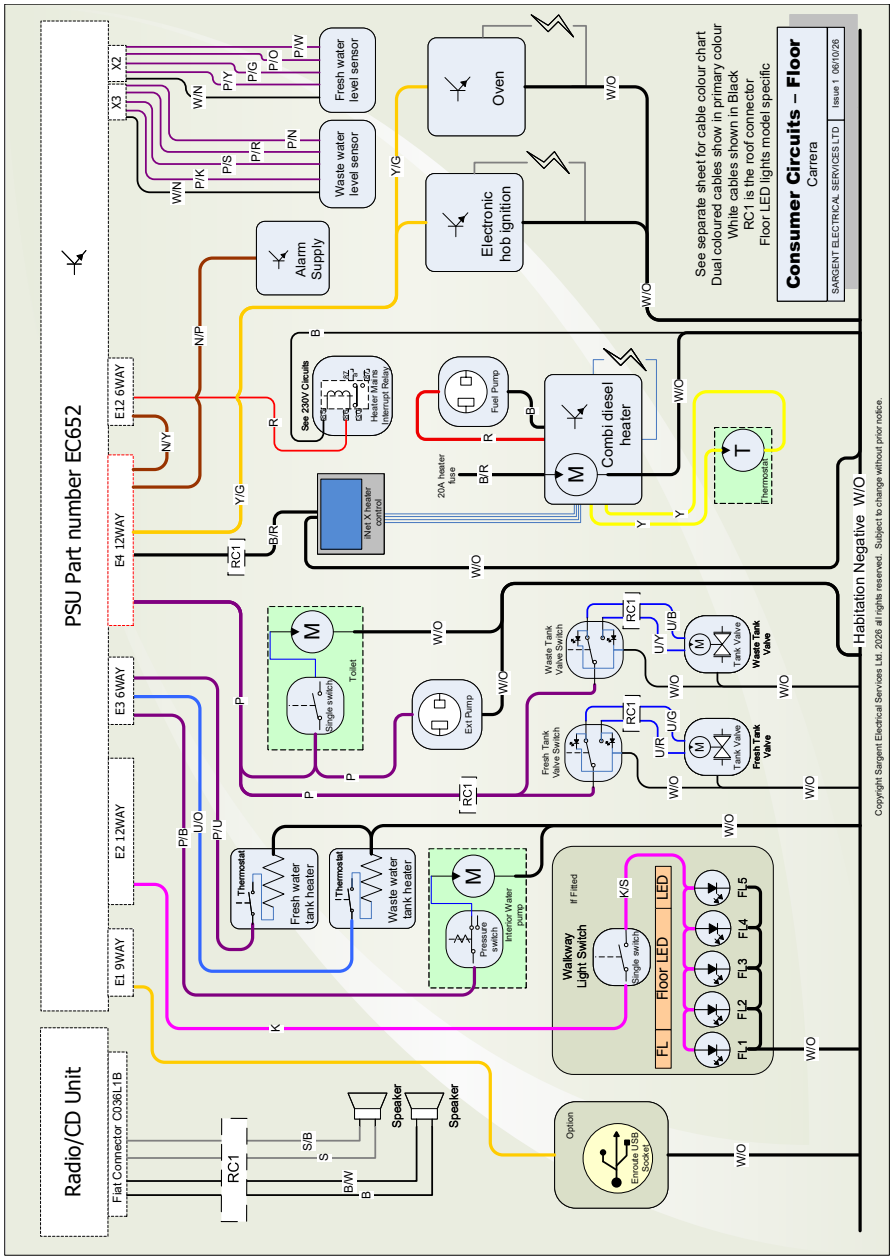

11.6 Power circuits

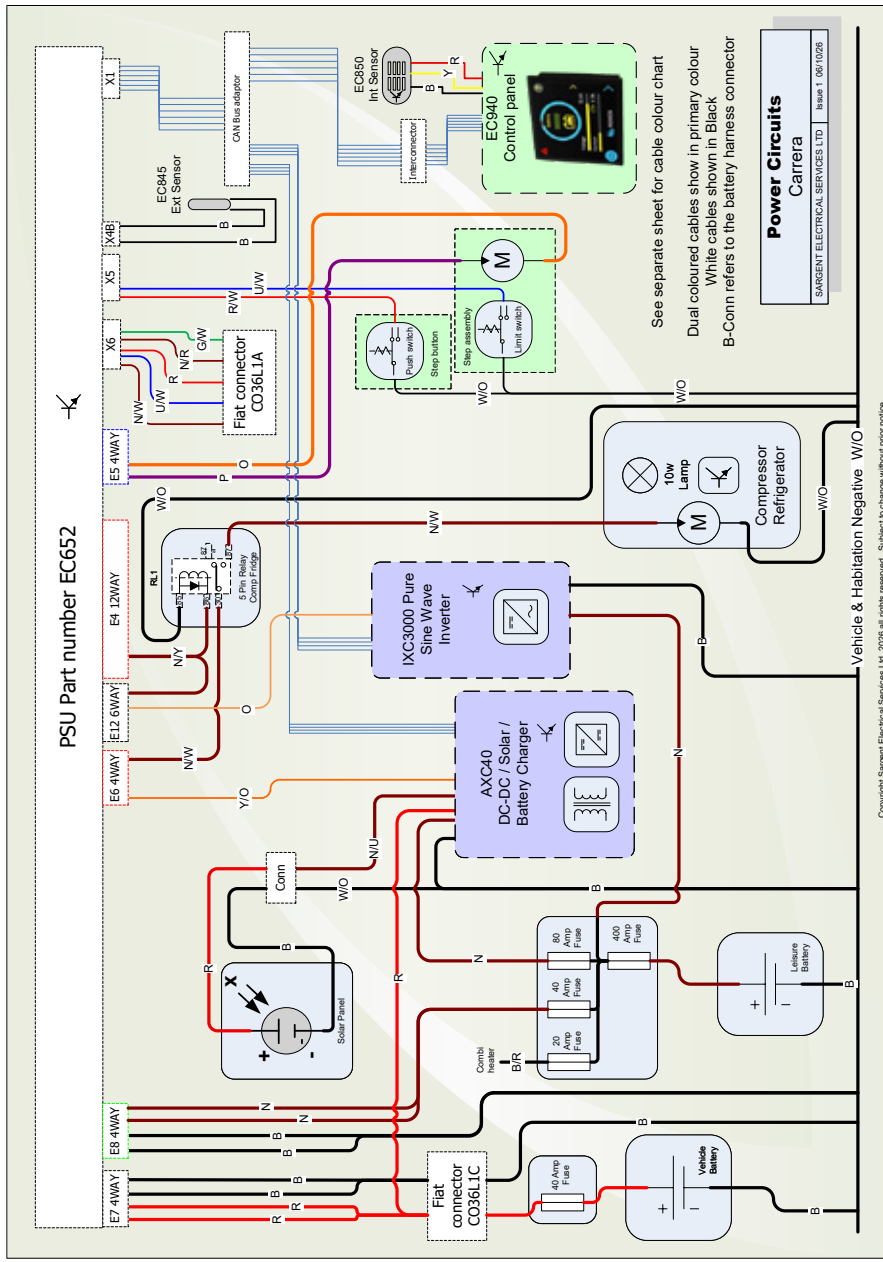

11.7 Consumer Circuits - Roof

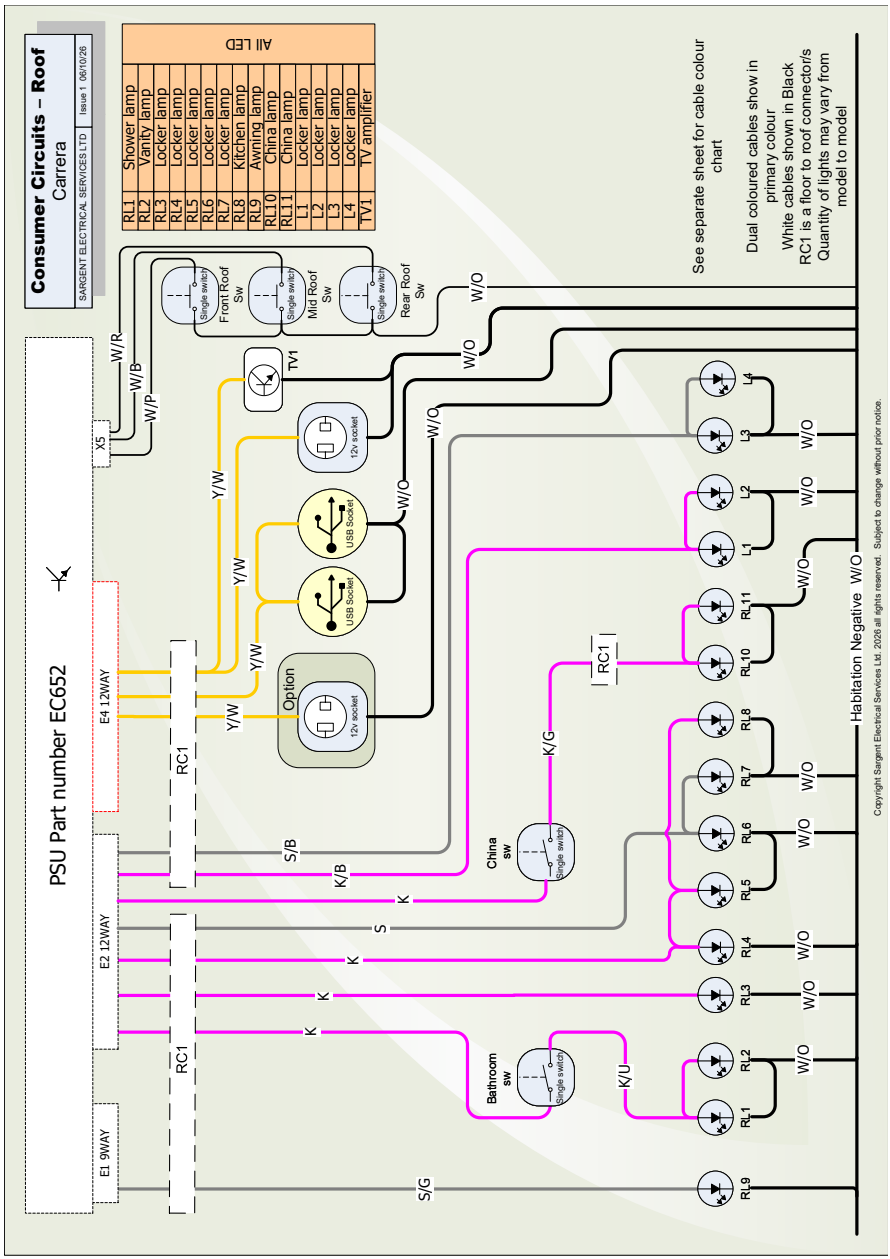

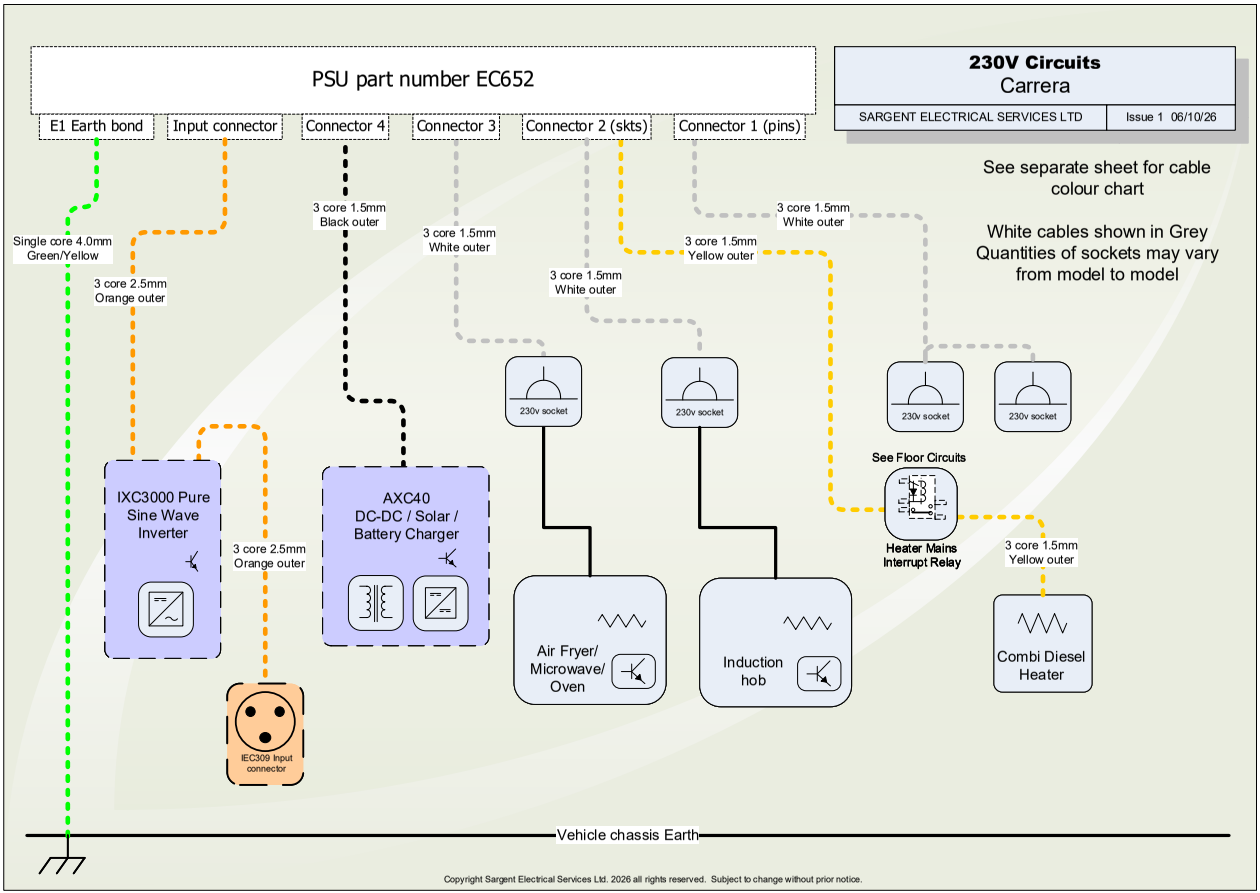
PSU part number EC652
230V Circuits
Carrera
SARGENT ELECTRICAL SERVICES LTD
Issue 1 06/10/26
E1 Earth bond
Input connector
Connector 4
Connector 3
Connector 2 (skts)
Connector 1 (pins)
See separate sheet for cable colour chart
White cables shown in Grey
Quantities of sockets may vary from model to model
Single core 4.0mm Green/Yellow
3 core 2.5mm Orange outer
3 core 1.5mm Black outer
3 core 1.5mm White outer
3 core 1.5mm White outer
3 core 1.5mm Yellow outer
3 core 1.5mm White outer
230v socket
230v socket
230v socket
230v socket
See Floor Circuits
Heater Mains Interrupt Relay
3 core 1.5mm Yellow outer
IXC3000 Pure Sine Wave Inverter
3 core 2.5mm Orange outer
AXC40 DC-DC / Solar / Battery Charger
Air Fryer/ Microwave/ Oven
Induction hob
Combi Diesel Heater
IEC309 Input connector
Vehicle chassis Earth
Copyright Sargent Electrical Services Ltd. 2026 all rights reserved. Subject to change without prior notice.

12V DC PROTECTION (FUSES)

Fuse	Rating	Colour	Circuit Description
1	25A	White	Battery Charger / Spare
2	7.5A	Brown	Fridge Control / Alarm
3	10A	Red	12V & USB Sockets / TV Amp / CV Radio
4	10A	Red	Extractor Fans / Heating
5	10A	Red	Appliances / Cooker / Toilet / USB
6	10A	Red	Water Pumps / MH Tank Heaters
7	10A	Red	Lighting, Main & Rear High Lights
8	10A	Red	Lighting, Entry & Front High Lights
9	10A	Red	MH Marker Lights / En Route Heating
10	10A	Red	Awning Light / MH Elect Step
11	15A	Blue	Motorhome Fridge 12V
12	15A	Blue	Motorhome Towing 12V
13	20A	Yellow	Motorhome Fridge D+

CV = Caravan, MH = Motorhome. Fuses 11-13 only fitted to Motorhomes. Label shows summary of circuits. For comprehensive information see handbook.

EC600 Carrera 2027 18684 Issue 2 www.sargentltd.co.uk

MAINS 230V PROTECTION

MCB	Rating	Circuit Description (Output Cable Colour)
1	13A	Hob (White)
2	16A	Heating System (Yellow) Combi Oven (White)
3	10A	Battery Charger (Black) Sockets (White)

12V DC HIGH CURRENT FUSES

Fuse	Rating	Colour	Circuit Description
1	400A	Purple	Battery/ Inverter
2	80A	White	Charger
3	60A	Yellow	Spare
4	40A	Green	PSU - EC652
5	20A	Black	Heating Appliance

Label shows summary of circuits. For comprehensive information see handbook.

18685 EC600 CARRERA 2027 Issue 1

Fuse Allocations 12V & 230V
Carrera

SARGENT ELECTRICAL SERVICES LTD | Issue 1 06/10/26

Copyright Sargent Electrical Services Ltd. 2026 all rights reserved. Subject to change without prior notice.

Example



Y/U Yellow cable with Blue stripe

Cable Colour Chart
Swift Group

SARGENT ELECTRICAL SERVICES LTD	Issue 1 06/10/26

12V Cable Colours

B	BLACK
N	BROWN
R	RED
O	ORANGE
Y	YELLOW
G	GREEN
U	BLUE
P	PURPLE
S	SLATE GREY
W	WHITE
K	PINK

230V Cable Colours

B	BLACK
N	BROWN
W	WHITE
O	ORANGE
Y	YELLOW
G	GREEN
U	BLUE

Copyright Sargent Electrical Services Ltd. 2026 all rights reserved. Subject to change without prior notice.

12. Useful information

12.1 Owners club 134

12.2 Spares and after sales customer service 134

12.3 Repair facilities 134

12.4 Caravan Clubs 135

12.5 Motoring Associations 135

12.6 Trade Association 135

12.7 Index 136

12.8 Change of ownership 138

12.1 Owners club

The Owners Club is a completely independent organisation run for the benefit of the motorhome owners. They have numerous rallies during the year in various parts of the country. Apart from the friendliness and companionship the Club generates it is also actively engaged in charity work for those less fortunate than ourselves. The address of the Secretary of the Owners Club can be obtained from the Swift Group website.

12.2 Spares and after sales customer service

A catalogue of spare parts are available through our Swift Group Dealer Network, from door catches through to spare wheels. Please note, all parts enquiries must be directed through your dealer, as the Swift Group does not operate a direct retail service.

We endeavour to supply parts for vehicles up to 8 years old. If the original part is no longer available your dealer should be able to source a suitable alternative.

ⓘ **Note:** Please remember to quote chassis VIN (Vehicle Identification Number) when ordering any items from your dealer. This can be found at the bottom of the front windscreen, on the plate on the front cross member within the engine compartment and on the Swift manufacturers plate situated on passenger door B pillar.

12.3 Repair facilities

Should you be unfortunate to encounter damage to your vehicle, we have a number of approved workshops and dealerships with workshop facilities to undertake such repairs.

Details of which can be found via our website: www.swiftgroup.co.uk/find-a-dealer

The enjoyment of motorhoming can be greatly enhanced by membership of one or more of the various motorhome/caravanning, motoring and holiday clubs. Here are some useful addresses:

12.4 Caravan Clubs

The Caravan Club,
East Grinstead House, East Grinstead
West Sussex, RH19 IUA
Tel: 01342 326944
www.caravanclub.co.uk

The Camping and Caravanning Club,
Greenfields House,
Westwood Way,
Coventry,
West Midlands.
Tel: 0845 130 7631 or 024 7647 5448
www.campingandcaravanningclub.co.uk

12.5 Motoring Associations

Automobile Association (AA)
Fanum House,
Basingstoke,
Hants. RG1 2EA
Tel: 08705 448866
www.theaa.co.uk
e-mail: customer.services@theaa.com

RAC Motoring Services
RAC Motoring Services
8 Surrey St
Norwich Norfolk NR1 3NG
Tel: 01922 437000
www.rac.co.uk

The Society of Motor Manufacturers and Traders Limited (SMMT)
Forbes House,
Halkin Street,
London SW1X 7DS
Tel: 020 7235 7000
www.smmt.co.uk

Green Flag
Tel: 0845 246 1557
www.greenflag.com

RBS Insurance
Churchill Court
Westmoreland Road
Bromley
Kent BR1 1DP
Tel: 0800 158 2493

12.6 Trade Association

NCC
Catherine House,
Victoria Road,
Aldershot,
Hampshire, GU11 1SS
Tel: 01252 318251
www.thencc.org.uk
www.motorhomeinfo.co.uk
e-mail: info@thencc.org.uk

© 2026 SWIFT GROUP LTD

12.7 Index

A

Acrylic (Plastic) Window Cleaning 107
Acrylic (Plastic) Window Condensation 107
Acrylic Windows 107
Additional security 36
Appliances 105, 106
Arrivals 15
Awnings and Tents 15, 38

B

Bottle Replacement Procedure 32

C

Cassette C260S 96
Choosing/Buying 23
Conventional Load 20

D

Departure 15
Dogs and other Pets 15
Driving 16

E

Environment 16
Essential Habitation 21
Exterior (Body / Chassis) 105
External 12v Fill Socket 42

F

Fastening the seat belt 25
Fire Precautions 15
Fresh Water Tank 42

G

Gross Train Weight 21

H

Height-based seats 23
How can you prevent condensation ... 108

I

In case of fire 34
Interior (Furniture / furnishings) 106
ISOFix Child Seat Restraint 24

L

Levelling the motorhome 38

M

Mass in Running Order 20
Maximum Technically Permissible Laden Mass 21
Maximum Technically PermissibleLaden Mass 21
Maximum User Payload 20
Midi Heki Rooflight 97
Mini Heki Rooflight 96
Modifications - DIY work 107
My Swift Life 11

N

Noise 15
Nose weight on towed trailers 21
Notification of change of ownership ... 138

O

On arrival at the campsite 49
On departure from the campsite 49
Operating instructions for blinds 96
Optional Equipment 21

P

Paintwork 107
Parking 16
Personal Effects 20
Plumbing 104
Positioning/Fitting 23
Pressure switch adjustment 43
Principle 44

R

Recomissioning the Water System 106
Releasing the seat belt 25
Removing Tar 107
Roof lights 96

S

Seat belts and legislation 23
Selecting a pitch 38
Sensor cleaning 44
Servicing 104
Sunroof blind 97
SuperSure Warranty 6
Supplier contacts 12

T

Thermal insulation heating 48
To operate the Blind 96

U

Use of Site Appliances 15

V

Vehicle Movement 15
VIN CHIP identification 36
VIN (Vehicle identification Number) 36

W

Waste Disposal 15
Waste water system 41
Weight-based seats 23
What is condensation 108
Wheels and Tyres 106
When condensation occurs 108
Where condensation occurs 108
Why condensation occurs 108

12.8 Change of ownership

Notification of change of ownership

As the new second hand owner, please notify the Swift Group of the change of ownership by emailing your details to:
enquiries@swiftleisure.co.uk.
Please provide a telephone number, date of purchase and a copy of your V5 document. We will confirm that your records have been updated via an email and you will be invited to join the "My Swift Life" portal, which will enable you to access your vehicle details.

Alternatively you can complete the form below and send the completed form with a copy of your V5 to the following address:
Customer Services
Swift Group Limited, Dunswell Road,
Cottingham,
East Yorkshire HU16 4JX.

ⓘ **Note:** Warranties are only transferable providing the terms and conditions of the warranty have been met by the previous owner(s). Please see warranty information at the beginning of this handbook for full details. The 'Extended Body shell warranty' is a non-transferable warranty.

Details of motorhome:	Model:	
	Chassis No:	
New owner:	Name:	
	Address:	
	Email:	
	Telephone:	
	Mobile:	
	Date of purchase:	
Previous owner:	Name:	
	Address:	
	Email:	
	Telephone:	
	Mobile:	
	Date of purchase:	



SWIFT GROUP

Dunswell Road
Cottingham
East Yorkshire
HU16 4JX
Tel: 01482 875740

Customer Experience Team
enquiries@swiftleisure.co.uk

Find out more at **swiftgroup.co.uk**